ภาคผนวก ง

เอกสารการสอบเทียบเครื่องมือตรวจวิเคราะห์

right solutions.
right partner.

รายการเครื่องมือที่ใช้ในการวิเคราะห์ / ทดสอบ

Sample Name	Parameter	Equipment Name	ID No.	Calibrated Date	Next Cal	Freq. Calibrate (Months)
Ambient	Particulate Matter (PM-10)	High Volume	RYG_FS0192	-	-	On site Calibration
Ambient	Particulate Matter (PM-10)	High Volume	RYG_FS0188	-	-	On site Calibration
Ambient	Particulate Matter (PM-10)	High Volume	RYG_FS0668	-	-	On site Calibration
Ambient	Particulate Matter (PM-10)	High Volume	RYG_FS0400	-	-	On site Calibration
Ambient	Particulate Matter (PM-10)	Digital Balance	RYG_EN0001	1-Mar-23	1-Mar-24	12
Ambient	Total Suspended Particulate	High Volume	RYG_FS0396	-	-	On site Calibration
Ambient	Total Suspended Particulate	High Volume	RYG_FS0179	-	-	On site Calibration
Ambient	Total Suspended Particulate	High Volume	RYG_FS0395	-	-	On site Calibration
Ambient	Total Suspended Particulate	High Volume	RYG_FS0180	-	-	On site Calibration
Ambient	Total Suspended Particulate	Digital Balance	RYG_EN0001	1-Mar-23	1-Mar-24	12
Ambient	Wind Speed / Wind Direction	Wind Speed / Wind Direction	RYG_FS0544	21-Jul-23	21-Jan-25	18
Noise	Leq 24 hrs	Sound Calibrator	RYG_FS0216	20-Sep-23	20-Sep-24	12
Noise	Leq 24 hrs	Sound Level Meter	RYG_FS0300	1-Sep-23	1-Sep-24	12
Noise	Leq 24 hrs	Sound Level Meter	RYG_FS0022	25-Jan-23	25-Jan-24	12
Noise	Leq 24 hrs	Sound Level Meter	RYG_FS0302	10-Aug-23	10-Aug-24	12
Noise	Leq 24 hrs	Sound Level Meter	RYG_FS0304	1-Sep-23	1-Sep-24	12
Noise	Leq 24 hrs	Sound Level Meter	RYG_FS0025	25-Jan-23	25-Jan-24	12
Noise	Leq 24 hrs	Sound Level Meter	RYG_FS0303	10-Aug-23	10-Aug-24	12
Rayong Lab	Nitrate	Spectrophotometer	RYG_EN0037	18-Sep-23	18-Mar-25	18
Rayong Lab	pH at 25 °C	pH meter	RYG_EN0183	27-Feb-23	27-Feb-24	12
Rayong Lab	Phenol	SPECTROPHOTOMETER	RYG_EN0179	18-Sep-23	18-Mar-25	18
Rayong Lab	Dissolved Oxygen	Chamber (Cold Room)	RYG_EN0185	25-Jan-23	25-Jul-24	18
Rayong Lab	Cyanide	SPECTROPHOTOMETER	RYG_EN0179	18-Sep-23	18-Mar-25	18
Rayong Lab	Ammonia Nitrogen	SPECTROPHOTOMETER	RYG_EN0179	18-Sep-23	18-Mar-25	18
Rayong Lab	BOD	DO meter with Sensor	RYG_EN0032	24-Jul-23	24-Jan-25	18
Rayong Lab	BOD	Incubator	RYG_EN0154	29-May-23	29-Nov-24	18
Water Lab	Zinc	ICP-MS	BKK_EL0043	6-Apr-23	6-Oct-24	18
Water Lab	Zinc	Hot Block	BKK_EL0054	22-Sep-23	22-Mar-25	18
Water Lab	Zinc	Chamber (Cold Room)	BKK_EN0167	30-Jun-22	30-Dec-23	18
Water Lab	Nickel	ICP-MS	BKK_EL0043	6-Apr-23	6-Oct-24	18
Water Lab	Nickel	Hot Block	BKK_EL0054	22-Sep-23	22-Mar-25	18
Water Lab	Nickel	Chamber (Cold Room)	BKK_EN0167	30-Jun-22	30-Dec-23	18
Water Lab	Trivalent Chromium	ICP-MS	BKK_EL0043	6-Apr-23	6-Oct-24	18
Water Lab	Trivalent Chromium	Hot Block	BKK_EL0054	22-Sep-23	22-Mar-25	18
Water Lab	Trivalent Chromium	Chamber (Cold Room)	BKK_EN0167	30-Jun-22	30-Dec-23	18
Water Lab	Fecal Coliform	Autoclave	BKK_ML0037	17-Jul-23	17-Jan-25	18
Water Lab	Fecal Coliform	Incubator	BKK_ML0010	17-Jul-23	17-Jan-25	18
Water Lab	Fecal Coliform	Hot Air Oven	BKK_ML0013	21-Nov-22	21-May-24	18
Water Lab	Fecal Coliform	Water Bath	BKK_ML0056	20-Apr-23	20-Apr-24	12
Water Lab	Chromium	ICP-MS	BKK_EL0043	6-Apr-23	6-Oct-24	18
Water Lab	Chromium	Hot Block	BKK_EL0054	22-Sep-23	22-Mar-25	18
Water Lab	Chromium	Chamber (Cold Room)	BKK_EN0167	30-Jun-22	30-Dec-23	18
Water Lab	Manganese	ICP-MS	BKK_EL0043	6-Apr-23	6-Oct-24	18
Water Lab	Manganese	Hot Block	BKK_EL0054	22-Sep-23	22-Mar-25	18
Water Lab	Manganese	Chamber (Cold Room)	BKK_EN0167	30-Jun-22	30-Dec-23	18
Water Lab	Hexavalent Chromium	Spectrophotometer	BKK_EN0018	15-Sep-23	15-Sep-24	12
Water Lab	Arsenic	ICP-MS	BKK_EL0043	6-Apr-23	6-Oct-24	18
Water Lab	Arsenic	Hot Block	BKK_EL0054	22-Sep-23	22-Mar-25	18
Water Lab	Arsenic	Chamber (Cold Room)	BKK_EN0167	30-Jun-22	30-Dec-23	18
Water Lab	Cadmium	ICP-MS	BKK_EL0043	6-Apr-23	6-Oct-24	18
Water Lab	Cadmium	Hot Block	BKK_EL0054	22-Sep-23	22-Mar-25	18
Water Lab	Cadmium	Chamber (Cold Room)	BKK_EN0167	30-Jun-22	30-Dec-23	18
Water Lab	Total Coliform	Autoclave	BKK_ML0037	17-Jul-23	17-Jan-25	18
Water Lab	Total Coliform	Incubator	BKK_ML0012	21-Nov-22	21-May-24	18
Water Lab	Total Coliform	Hot Air Oven	BKK_ML0013	21-Nov-22	21-May-24	18

right solutions.
right partner.

รายการเครื่องมือที่ใช้ในการวิเคราะห์ / ทดสอบ

Sample Name	Parameter	Equipment Name	ID No.	Calibrated Date	Next Cal	Freq. Calibrate (Months)
Water Lab	Copper	ICP-MS	BKK_EL0043	6-Apr-23	6-Oct-24	18
Water Lab	Copper	Hot Block	BKK_EL0054	22-Sep-23	22-Mar-25	18
Water Lab	Copper	Chamber (Cold Room)	BKK_EN0167	30-Jun-22	30-Dec-23	18
Water Lab	Lead	ICP-MS	BKK_EL0043	6-Apr-23	6-Oct-24	18
Water Lab	Lead	Hot Block	BKK_EL0054	22-Sep-23	22-Mar-25	18
Water Lab	Lead	Chamber (Cold Room)	BKK_EN0167	30-Jun-22	30-Dec-23	18
Water Lab	Mercury	DUO-CVAFS / CVAAS	BKK_EL0023	24-May-23	24-May-24	12

High Volume Air Sampler Calibration Worksheet

Project Site :	WHA Industrial Estate Rayong Company Limited	**Barometric Pressure (mm Hg) :**	757
Calibrate Location :	วัดหินโค้ง (A1)	**Temperature (°C) :**	30
Calibrate Date :	10-Dec-23	**High Volume ID :**	RYG_FS0192
CalibrationSheet No.:	**C-101223-RYG_FS0192**	**High Volume Model :**	TE-5009X
Calibrator ID:	RYG_FS0205	**High Volume S/N :**	5331
Calibrator Model :	TE-5028A	**Calibrator Slope :**	0.94434
Calibrator S/N :	1166	**Calibrator Intercept :**	-0.01292

Test No.	**Delta H_2O (inch)**	**Qa (m^3/min)**	**I : Chart (CFM)**	**Linear Regression**
1	2.0	0.960	34	Slope : 29.9037
2	2.2	1.007	36	Intercept : 5.6833
3	2.8	1.134	40	Correlation Coefficient : 0.9981
4	3.6	1.284	44	
5	4.0	1.353	46	

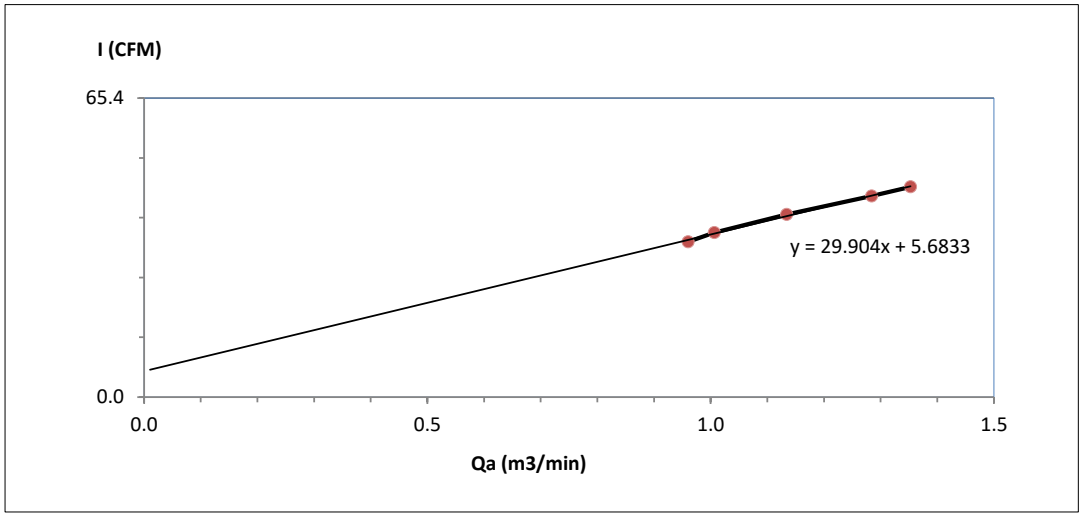

Calibrated by [redacted]

(Mr.Jakkarin manwicha)
Field Scientist(1)

(Mr. Noppong Juntarupan)
Enviro Field Coordinator Scientist (3)

High Volume Air Sampler Calibration Worksheet

Project Site :	WHA Industrial Estate Rayong Company Limited	**Barometric Pressure (mm Hg) :**	757
Calibrate Location :	กลุ่มบ้าน หมู่ 11 บ้านสามเนิน จุดที่ 1 (A2)	**Temperature (°C) :**	30
Calibrate Date :	10-Dec-23	**High Volume ID :**	RYG_FS0188
CalibrationSheet No.:	**C-101223-RYG_FS0188**	**High Volume Model :**	TE-5009X
Calibrator ID:	RYG_FS0205	**High Volume S/N :**	4796
Calibrator Model :	TE-5028A	**Calibrator Slope :**	0.94434
Calibrator S/N :	1166	**Calibrator Intercept :**	-0.01292

Test No.	Delta H_2O (inch)	Qa (m^3/min)	I : Chart (CFM)	Linear Regression
1	2.0	0.960	34	Slope : 30.8104
2	2.2	1.007	36	Intercept : 4.7467
3	2.8	1.134	40	Correlation Coefficient : 0.9982
4	3.6	1.284	44	
5	3.9	1.336	46	

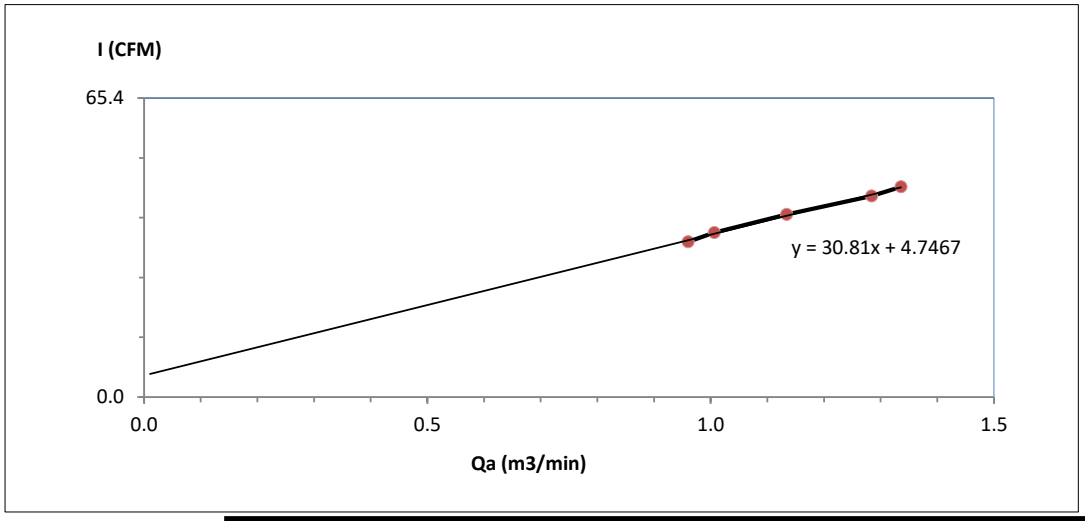

[redacted]

Calibrated by _____ Approved by : _____

(Mr.Jakkarin manwicha)
Field Scientist(1)

(Mr. Noppong Juntarupan)
Enviro Field Coordinator Scientist (3)

High Volume Air Sampler Calibration Worksheet

Project Site :	WHA Industrial Estate Rayong Company Limited	**Barometric Pressure (mm Hg) :**	757
Calibrate Location :	กลุ่มบ้าน หมู่ 11 บ้านสามเนิน จุดที่ 2 (A3)	**Temperature (°C) :**	30
Calibrate Date :	10-Dec-23	**High Volume ID :**	RYG_FS0668
CalibrationSheet No.:	**C-101223-RYG_FS0668**	**High Volume Model :**	TE-5009X
Calibrator ID:	RYG_FS0205	**High Volume S/N :**	6267
Calibrator Model :	TE-5028A	**Calibrator Slope :**	0.94434
Calibrator S/N :	1166	**Calibrator Intercept :**	-0.01292

Test No.	Delta H_2O (inch)	Qa (m^3/min)	I : Chart (CFM)	Linear Regression
1	1.9	0.936	34	Slope : 28.6742
2	2.2	1.007	36	Intercept : 7.0062
3	3.0	1.173	40	Correlation Coefficient : 0.9974
4	3.6	1.284	44	
5	4.0	1.353	46	

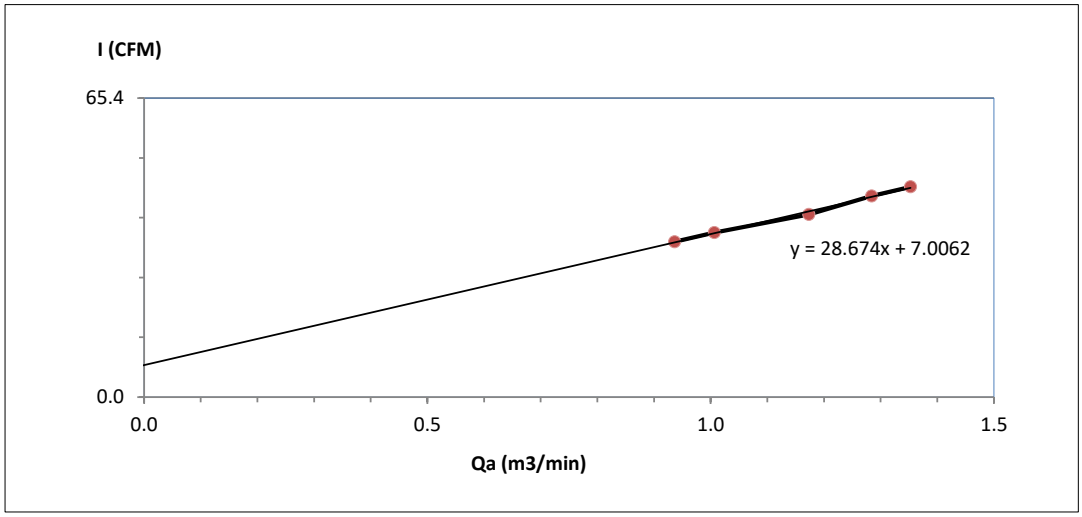

[redacted]

Calibrated by _____

(Mr.Jakkarin manwicha)
Field Scientist(1)

Approved by : _____

(Mr. Noppong Juntarupan)
Enviro Field Coordinator Scientist (3)

High Volume Air Sampler Calibration Worksheet

Project Site :	WHA Industrial Estate Rayong Company Limited	**Barometric Pressure (mm Hg) :**	757
Calibrate Location :	หมู่ที่ 8 บ้านโขดกลาง (A4)	**Temperature (°C) :**	30
Calibrate Date :	10-Dec-23	**High Volume ID :**	RYG_FS0400
CalibrationSheet No.:	**C-101223-RYG_FS0400**	**High Volume Model :**	TE-5009X
Calibrator ID:	RYG_FS0205	**High Volume S/N :**	5691
Calibrator Model :	TE-5028A	**Calibrator Slope :**	0.94434
Calibrator S/N :	1166	**Calibrator Intercept :**	-0.01292

Test No.	Delta H_2O (inch)	Qa (m^3/min)	I : Chart (CFM)	Linear Regression
1	1.8	0.912	34	Slope : 27.6295
2	2.2	1.007	36	Intercept : 8.5618
3	2.8	1.134	40	Correlation Coefficient : 0.9990
4	3.6	1.284	44	
5	4.0	1.353	46	

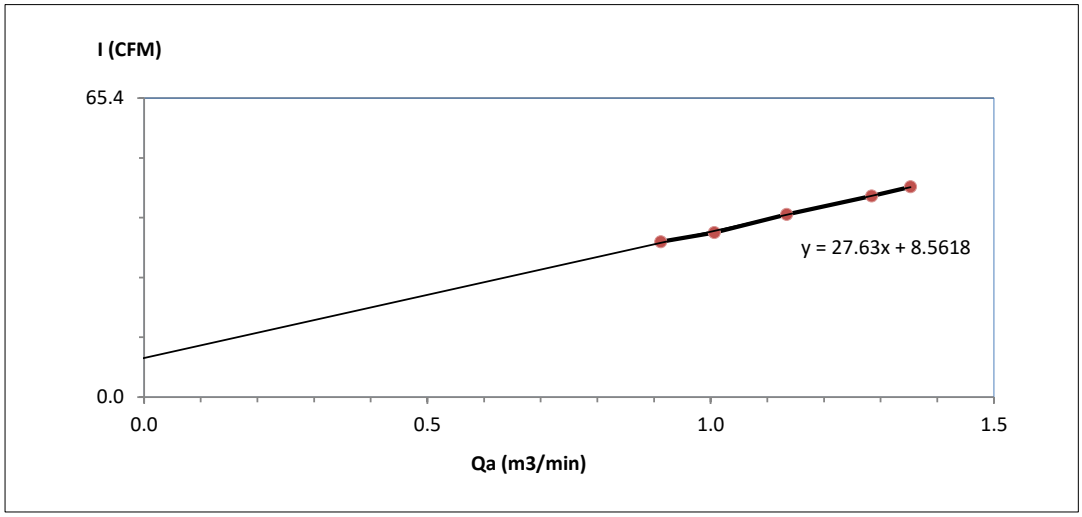

[redacted]

Calibrated by _____ Approved by : _____

(Mr.Jakkarin manwicha)
Field Scientist(1)

(Mr. Noppong Juntarupan)
Enviro Field Coordinator Scientist (3)

Sartorius (Thailand) Co., Ltd.
129 Rama 9 Road, Huaykwang, Huaykwang, Bangkok 10310
Tel: +66 2643 8361-6 , e-mail: service.thailand@sartorius.com

NSC-TISI-TIS 17025
CALIBRATION 0426

SARTORIUS

REVIEW [redacted]
APPROVE
NEXT CAL. DATE 09/03/24

Certificate of Calibration

Model Number :	LA130S-F	Certificate No. :	23BCI0110
Description :	Analytical Balance	Issued Date :	Friday, March 03, 2023
Serial Number :	25409664	Reference No. :	204833
ID No. :	RYG_EN0001		
Manufacturer :	Sartorius	Page No. :	1 0f 2

Customer Name : ALS Laboratory Group (Thailand) Co.,Ltd. (Rayong Branch)
616/10 Moo 5 T.Maenam Khu, A.Pluak Daeng, Rayong 21140, Thailand.

Calibrated Place : ALS Laboratory Group (Thailand) Co., Ltd.(Balance Room)
616/10 Moo 5 T.Maenam Khu, A.Pluak Daeng, Rayong 21140, Thailand.

Calibrated By : Mr.Chonchai Inthana
Calibration Date : Wednesday, March 01, 2023

Calibration Procedure No. : This calibration was conducted by
Using in-house calibration procedure number (WI-003)
Based on UKAS LAB 14 : 2019

Metrological data :

Capacity : 150 g Readability : 0.0001 g

Ambients Conditions:

Temperature :	24.2 ºC	±	5.0 ºC
Humidity :	60.0 % RH	±	10.0 % RH
Pressure	_	±	_

Reasons for calibration

☐ New Installation ☐ Service / Repaired ☑ Re-calibration/ Maintenance

Equipment Condition: ☑ Good Operate ☐ Fair

Measurement Method UKAS Publication Ref :Lab 14

The measurement uncertainty stated is the expended uncertainty which is obtained from the standard uncertainty multiplied by the coverage factor (k=2) to provide a level of confidence of approximately 95%. It is determined in accordance with the Guide to Expression of Uncertainty in Measurement (GUM). The calibration certificate documents the traceability to National Standards, which realise the unit of measurement according to the International Standard System of Units (SI). Report of Tolerance came form list of Sartorius Metrological Specifications.

Traceability:

Model Number	Description	Traceability	Cetificate No.	Due Date
YCS011-522-00	Sartorius weight set 1mg - 5000g E2,YCS011-522-00	SPC-RT	C02212565	14-Sep-2023
MHB-382SD	Humidity/Barometer/Temp Lutron MHB-382SD	DKSH	C19220444	5-Sep-2023

This certificate relate and apply this equipment only.

This certificate may not be reproduced other than in full except with the prior written approval of the Verification Operation Division Sartorius (Thailand) Co., Ltd.

[redacted]
Mr.chonchai Intrhana(Technical Manager)

STAMP

SARTORIUS (THAILAND) CO., LTD. SARTORIUS ISO/IEC 17025:2017

SOP FM 33 03 February 2022

Sartorius (Thailand) Co., Ltd.
129 Rama 9 Road, Huaykwang, Huaykwang, Bangkok 10310
Tel: +66 2643 8361-6 Fax: +66 2643-8367, e-mail: service.thailand@sartorius.com

SARTORIUS

Certificate of Calibration

Model Number :	LA130S-F	Certificate No. :	23BCI0110
Description :	Analytical Balance	Issued Date :	Friday, March 03, 2023
Serial Number :	25409664	Reference No. :	204833
ID No. :	RYG_EN0001		
Manufacturer :	Sartorius	Page No. :	2 of 2

Calibration Results : Without Adjustment

Repeatability

The reproducibility is the ability of a weighing instrument to display nearly identical readouts under constant test conditions when the same load within a measurement series is placed repeatedly on the weighing pan in the same manner. The standard deviation is used to express reproducibility quantitatively.

Nominal Value : (Low Load) 10 g, Tolerance 0.0001 g		Nominal Value : (High Load) 100 g, Tolerance 0.0001 g	
10.0000	100.0001	10.0000	100.0001
10.0000	100.0002	10.0001	100.0001
10.0001	100.0001	10.0000	100.0001
10.0000	100.0000	9.9999	100.0002
9.9999	100.0002	9.9998	100.0001
Standard Deviation	0.00009		0.00006

Eccentricity (Off-center loading error)

The off-center loading error is yielded by the difference between the readout of the load, i.e. 1/3 or 1/4 of maximim capacity, placed in the middle of the weighing pan and between each of four additional measurement points (positions defined according to OIML R76).

Nominal value : 50 g
Tolerance *0.0004* g

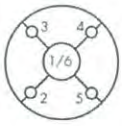

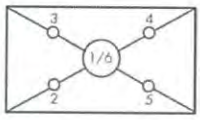

	Difference
1	–
2	0.0000
3	-0.0001
4	0.0001
5	0.0000
6	-

Linearity

The linearity, also called linearity error. Describes the deviation of the characteristic curve of a weighing instrument from the linear slope.

Tolerance *0.0002* g

Nominal Value (g)	Conventional Mass Value (g)	Displayed Value (g)	Deviation (g)	Uncertainty (g)
0.01	0.0100	0.0100	0.0000	0.00022
0.05	0.0500	0.0500	0.0000	0.00023
0.1	0.1000	0.1000	0.0000	0.00023
0.5	0.5000	0.5000	0.0000	0.00023
1	1.0000	1.0000	0.0000	0.00023
2	2.0000	2.0000	0.0000	0.00023
5	5.0000	5.0000	0.0000	0.00022
10	10.0000	10.0001	0.0001	0.00024
20	20.0000	20.0001	0.0001	0.00023
100	100.0000	100.0002	0.0002	0.00026

End of Report.

High Volume Air Sampler Calibration Worksheet

Project Site :	WHA Industrial Estate Rayong Company Limited	**Barometric Pressure (mm Hg) :**	757
Calibrate Location :	วัดหินโค้ง (A1)	**Temperature (°C) :**	30
Calibrate Date :	10-Dec-23	**High Volume ID :**	RYG_FS0396
CalibrationSheet No.:	**C-101223-RYG_FS0396**	**High Volume Model :**	TE-5170D
Calibrator ID:	RYG_FS0205	**High Volume S/N :**	5688
Calibrator Model :	TE-5028A	**Calibrator Slope :**	1.50765
Calibrator S/N :	1166	**Calibrator Intercept :**	-0.02043

Test No.	Delta H_2O (inch)	Q_{std} (m^3/min)	I : Chart (CFM)	Linear Regression
1	3.0	1.1575	44	Slope : 29.4281
2	3.4	1.2309	46	Intercept : 9.8802
3	4.2	1.3658	50	Correlation Coefficient : 0.9992
4	5.0	1.4884	54	
5	5.6	1.5740	56	

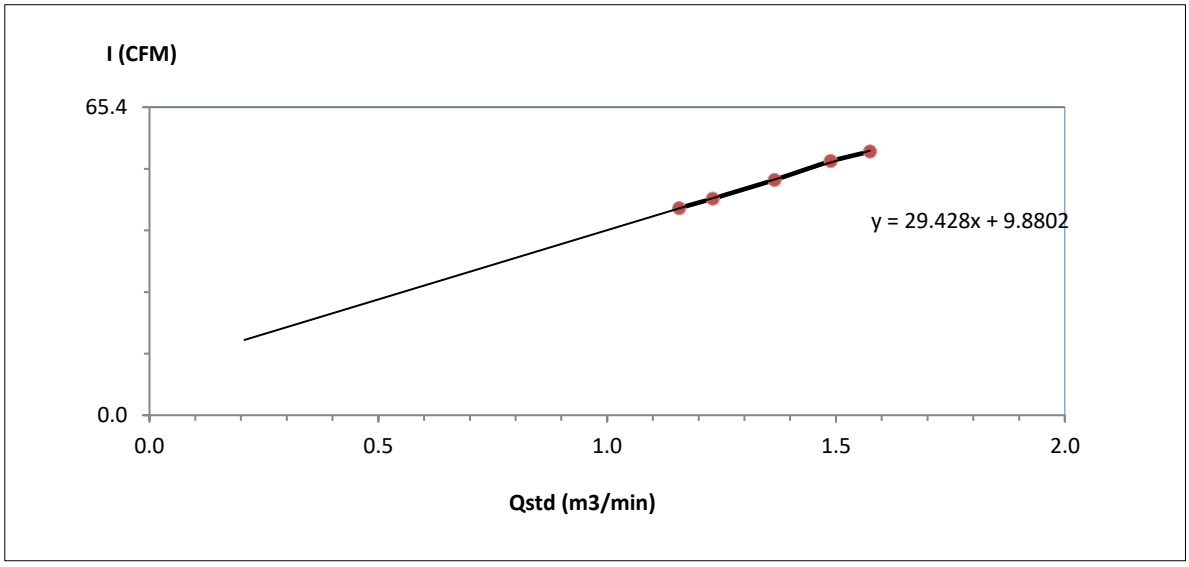

[redacted]

Calibrated by _____ Approved by : _____

(Mr.Jakkarin manwicha)
Field Scientist(1)

(Mr. Noppong Juntarupan)
Enviro Field Coordinator Scientist (3)

High Volume Air Sampler Calibration Worksheet

Project Site :	WHA Industrial Estate Rayong Company Limited	**Barometric Pressure (mm Hg) :**	757
Calibrate Location :	กลุ่มบ้าน หมู่ 11 บ้านสามเนิน จุดที่ 1 (A2)	**Temperature (°C) :**	30
Calibrate Date :	10-Dec-23	**High Volume ID :**	RYG_FS0179
CalibrationSheet No.:	**C-101223-RYG_FS0179**	**High Volume Model :**	TE-5170D
Calibrator ID:	RYG_FS0205	**High Volume S/N :**	4805
Calibrator Model :	TE-5028A	**Calibrator Slope :**	1.50765
Calibrator S/N :	1166	**Calibrator Intercept :**	-0.02043

Test No.	Delta H_2O (inch)	Q_{std} (m^3/min)	I : Chart (CFM)	Linear Regression
1	2.8	1.1189	44	Slope : 24.8369
2	3.2	1.1948	46	Intercept : 16.2296
3	4.2	1.3658	50	Correlation Coefficient : 0.9998
4	5.2	1.5174	54	
5	5.8	1.6015	56	

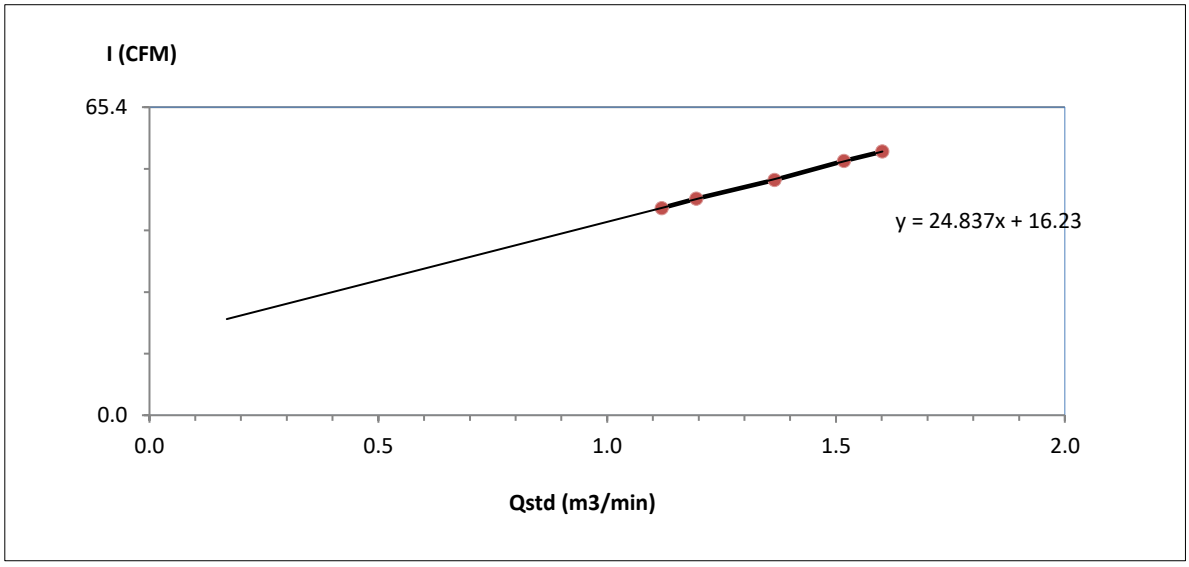

[redacted]

Calibrated by _____ Approved by : _____

(Mr.Jakkarin manwicha)
Field Scientist(1)

(Mr. Noppong Juntarupan)
Enviro Field Coordinator Scientist (3)

High Volume Air Sampler Calibration Worksheet

Project Site :	WHA Industrial Estate Rayong Company Limited	**Barometric Pressure (mm Hg) :**	757
Calibrate Location :	กลุ่มบ้าน หมู่ 11 บ้านสามเนิน จุดที่ 2 (A3)	**Temperature (°C) :**	30
Calibrate Date :	10-Dec-23	**High Volume ID :**	RYG_FS0395
CalibrationSheet No.:	**C-101223-RYG_FS0395**	**High Volume Model :**	TE-5170D
Calibrator ID:	RYG_FS0205	**High Volume S/N :**	5692
Calibrator Model :	TE-5028A	**Calibrator Slope :**	1.50765
Calibrator S/N :	1166	**Calibrator Intercept :**	-0.02043

Test No.	Delta H_2O (inch)	Q_{std} (m^3/min)	I : Chart (CFM)	Linear Regression
1	3.0	1.1575	44	Slope : 27.2674
2	3.4	1.2309	46	Intercept : 12.5175
3	4.2	1.3658	50	Correlation Coefficient : 0.9994
4	5.2	1.5174	54	
5	5.8	1.6015	56	

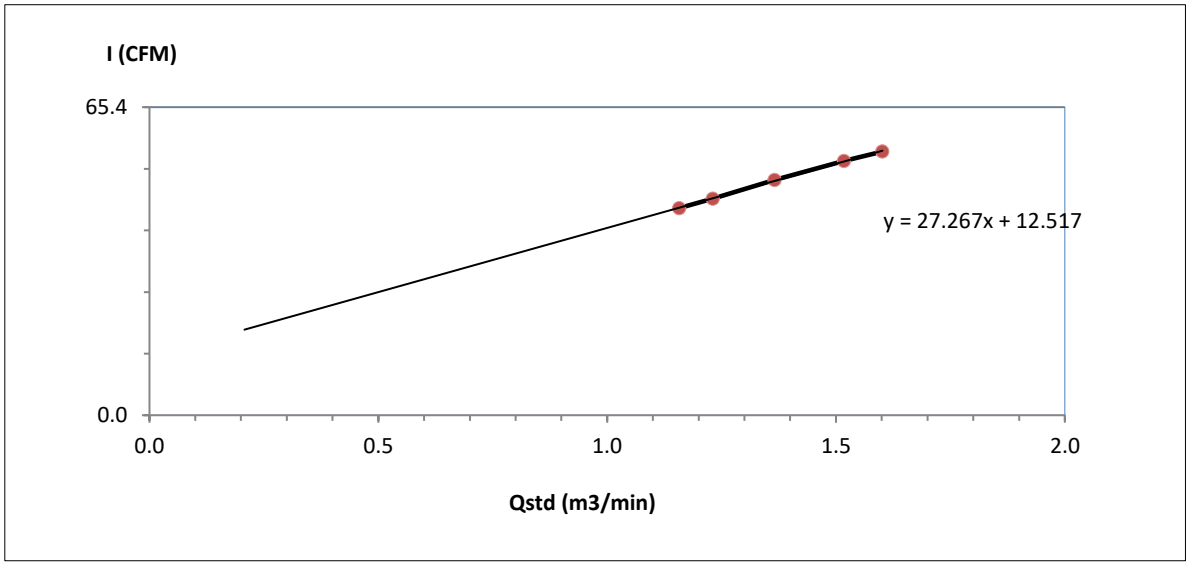

[redacted]

Calibrated by _____ Approved by : _____

(Mr.Jakkarin manwicha)
Field Scientist(1)

(Mr. Noppong Juntarupan)
Enviro Field Coordinator Scientist (3)

High Volume Air Sampler Calibration Worksheet

Project Site :	WHA Industrial Estate Rayong Company Limited	**Barometric Pressure (mm Hg) :**	757
Calibrate Location :	หมู่ที่ 8 บ้านโขดกลาง (A4)	**Temperature (°C) :**	30
Calibrate Date :	10-Dec-23	**High Volume ID :**	RYG_FS0180
CalibrationSheet No.:	**C-101223-RYG_FS0180**	**High Volume Model :**	TE-5170D
Calibrator ID:	RYG_FS0205	**High Volume S/N :**	1328
Calibrator Model :	TE-5028A	**Calibrator Slope :**	1.50765
Calibrator S/N :	1166	**Calibrator Intercept :**	-0.02043

Test No.	Delta H_2O (inch)	Q_{std} (m^3/min)	I : Chart (CFM)	Linear Regression
1	2.8	1.1189	44	Slope : 25.4183
2	3.2	1.1948	46	Intercept : 15.7516
3	4.0	1.3334	50	Correlation Coefficient : 0.9973
4	5.0	1.4884	54	
5	5.8	1.6015	56	

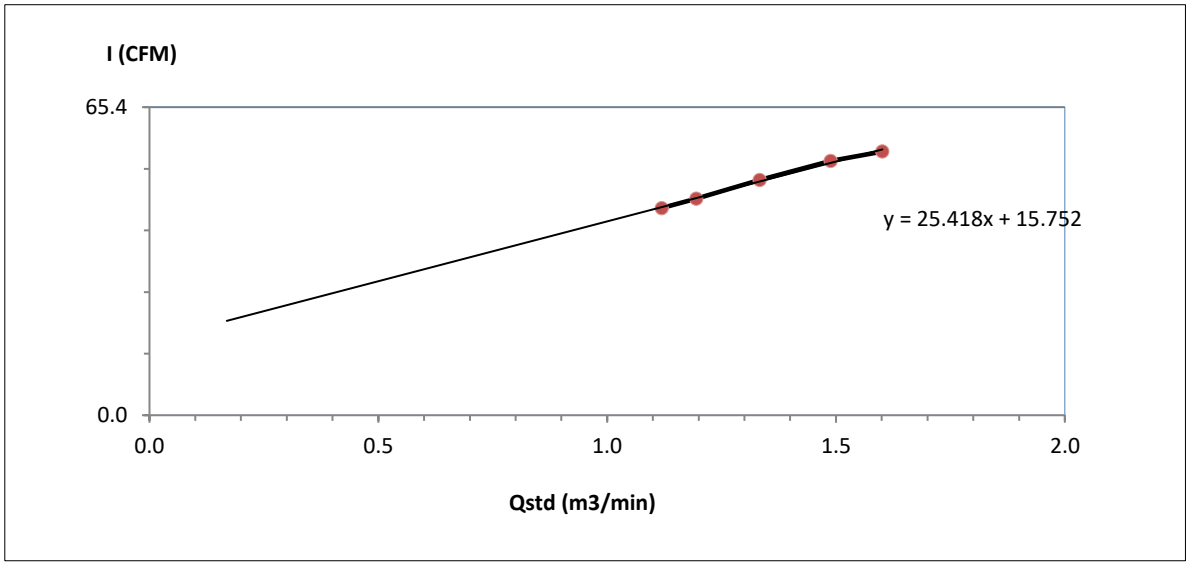

Calibrated by [redacted]

(Mr.Jakkarin manwicha)
Field Scientist(1)

(Mr. Noppong Juntarupan)
Enviro Field Coordinator Scientist (3)

JNAC
JIRANATEE ASSOCIATES CO.,LTD.

Jiranatee Associates Co.,Ltd
63/14-15, 67/35-36
Petchkasem 7,7/1, Rd.Watthapra, Bangkokyai,
Bangkok 10600 (Thailand)
Tel: +6608680812
Mobile: +66863999453
E-mail: jnac-calibration@jiranatee.com
Web site: www.jiranatee.com

Accredited calibration laboratory
ISO/IEC 17025:2017
NSC-TISI-TIS 17025
CALIBRATION 0367

Air speed measurement laboratory
Calibration services department.

REVIEW BY .....[redacted]
APPROVED BY ..
NEXT CAL. DATE 21/1/25

Certificate Number
CWS-001-66

CERTIFICATE OF CALIBRATION

MEASUREMENT ITEM : Cup anemometer
MANUFACTURER : Novalynx
MODEL/TYPE : Sensor: WS-02F
Data logger: 110-WS-25DL-D
SERIAL NUMBER : Sensor: WSD-A5662
Data logger: A5662
ID NUMBER : RYG_FS0544
CONDITION AS-RECEIVED : Used item
CUSTOMER : ALS laboratory group (Thailand) Co., Ltd.
104 Phatthanakan 40, Phatthanakan Rd, Khwaeng Suan Luang, Khet Suan Luang, Bangkok 10250 Thailand.

RECEIVED DATE : 11 Jul 2023
MEASUREMENT DATE : 21 Jul 2023
ISSUE DATE : 21 Jul 2023

ENVIRONMENTAL CONDITIONS:
Ambient condition in the laboratory are as follow:

Temperature	: 23.0 ± 3.0	˚C
Relative Humidity	: 55.0 ± 15.0	%RH
Atmospheric Pressure	: 1010 ± 10	hPa

PLACE OF CALIBRATION : Eiffel-type wind tunnel of Jiranatee Associates Co., Ltd.

CALIBRATION CONDITIONS

: Wind tunnel cross-section area[1]	900	cm^2
Win direction frontal area[2]	100	cm^2
Diameter of mounting pipe[3]	-	mm
Blockage ratio of test object[4]	0.111	[-]

Preconditioning : 24 hours at ambient conditions.
Measurement Condition : The average values during measurement are (24.0) ˚C, (41.7) %RH and (1009.1) hPa.

Calibration procedure:
The cup anemometer was calibrated against Standard air velocity transducer model: 8455-12 and pitot tube with precision differential pressure meter model: DPM2500 in an close test-section of Eiffel-type wind tunnel with 900 cm^2 cross test section area. The WI-CL-007 based on IEC 61400-12-1, Wind energy generation systems – Part 12-1: Power performance measurements of electricity producing wind turbines, March 2017 was used as a calibration guideline.

Traceability:
This certificate provides a traceability of The measurement to recognized the national standards, and to realization of the international system of units (SI) through the NIMT (National Metrology Institute of Thailand) via Certificate number: MW-0052-21 and MW-0066-22

Uncertainty of Measurement:
The reported uncertainty of measurement is based on the standard uncertainty multiplied by a coverage factor k=2, Which for a normal distribution corresponds to a coverage probability of approximately 95%. The standard uncertainty has been determined in accordance with the GUM 'Evaluation of measurement data - Guide to the expression of uncertainty in measurement'

TABULATION OF RESULTS:
The table on next page give the measured values.

Calibrated by:
☑ Mr. Sorawit Thachalad
☐ Miss Jittraporn Lertsomphol

JNAC JIRANATEE ASSOCIATES CO.,LTD.

Approved signatory: .....[redacted].....
Mr. Parinya Booncharoen
Calibration Department Manager

Remark:
[1] Nozzle cross-section area of the wind tunnel
[2] Projected cross-section area of the tested object include mounting pipe
[3] Diameter of mounting pipe
[4] Ratio [2] to [1]

THIS CERTIFICATE OF CALIBRATION MAY NOT BE REPRODUCED EXCEPT IN FULL UNLESS PERMISSION FOR REPRODUCTION HAS BEEN OBTAINED IN WRITING FROM THE LABORATORY

Jiranatee Associates Co.,Ltd.

Certificate Number
CWS-001-66

MEASUREMENT RESULTS [5]

The cup anemometer, Unit Under Calibration (UUC) was exercise at 10 m/s for 5 minutes prior to calibration being performed. The standard air velocity 0.5 m/s to 5 m/s was calculated by a standard air velocity transducer and above 5 m/s to 30 m/s was calculated by a pitot tube with precision differential pressure meter which was installed 40 mm and 300 mm respectively away from wind tunnel nozzle, UUC was installed at center of the test section. The calibration was carried out under both rising and falling air velocity in the range of 1 m/s to 16 m/s at calibration interval of 1 m/s. The results of calibration and associated measurement uncertainties are reported in the table below.

v_{std} [6] (m/s)	Temp. wind tunnel (°C)	Temp. room (°C)	v_{uuc} [7] (m/s)	Error (m/s)	*U (k=2)* (m/s)
1.024	23.84	23.95	0.8	-0.2	0.31
2.079	24.08	23.95	1.8	-0.3	0.31
3.019	24.04	23.95	2.8	-0.2	0.31
4.150	24.12	23.95	3.9	-0.3	0.31
5.00	23.72	23.95	4.8	-0.2	0.31
5.99	23.88	23.95	5.8	-0.2	0.31
7.04	23.68	23.95	6.9	-0.2	0.31
8.15	23.64	23.95	7.9	-0.2	0.31
9.09	23.30	23.95	9.0	-0.1	0.31
10.05	23.40	23.95	9.9	-0.1	0.31
11.13	23.48	23.95	11.0	-0.2	0.31
12.11	23.40	23.95	12.0	-0.1	0.31
13.16	23.50	23.95	13.0	-0.1	0.31
14.22	23.40	23.95	14.0	-0.2	0.31
15.22	23.50	23.95	15.0	-0.2	0.31
16.27	23.44	23.95	16.1	-0.2	0.31

Remark:

[5] Calibration results only count for the tested circumstances and environmental conditions during which calibration took place

[6] Velocity of standard

[7] Velocity of Unit Under Calibration

PHOTO OF CALIBRATION SET-UP

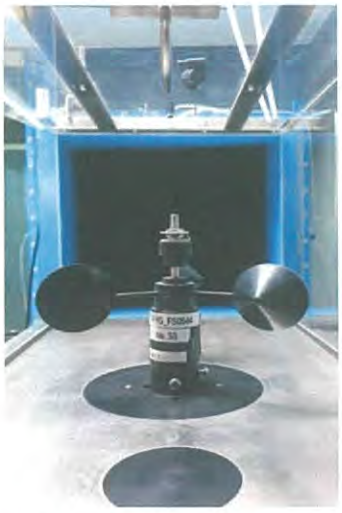

Calibration set-up of the cup anemometer calibration in the wind tunnel of Jiranatee Associates Co., Ltd. The cup anemometer shown may differ from the calibrated one. Remark: The proportion of the set- up is not true to scale due to imaging geometry.

End of Certificate of Calibration

JNAC
JIRANATEE ASSOCIATES CO., LTD.

Jiranatee Associates Co., Ltd.

JIRANATEE ASSOCIATES CO.,LTD.

Jiranatee Associates Co.,Ltd
63/14-15, 67/35-36
Petchkasem 7,7/1, Rd. Watthapra, Bangkokyai,
Bangkok 10600 (Thailand)
Tel: +6608680812
Mobile: +66863999453
E-mail: jnac-calibration@jiranatee.com
Web site: www.jiranatee.com

Accredited calibration laboratory
ISO/IEC 17025:2017
NSC-TISI-TIS 17025
CALIBRATION 0367

Air speed measurement laboratory
Calibration services department.

Certificate Number
CWD-001-66

CERTIFICATE OF CALIBRATION

MEASUREMENT ITEM : Wind Direction Sensor
MANUFACTURER : Novalynx
MODEL/TYPE : Sensor: WS-02F
Data logger: 110-WS-25DL-D
SERIAL NUMBER : Sensor: WSD-A5662
Data logger: A5662
ID NUMBER : RYG_FS0544
CONDITION AS-RECEIVED : Used item
CUSTOMER : ALS laboratory group (Thailand) Co., Ltd.
104 Phatthanakan 40, Phatthanakan Rd, Khwaeng Suan Luang, Khet Suan Luang, Bangkok 10250 Thailand.

RECEIVED DATE : 11 Jul 2023
MEASUREMENT DATE : 21 Jul 2023
ISSUE DATE : 21 Jul 2023

ENVIRONMENTAL CONDITIONS:
Ambient condition in the laboratory are as follow:

Temperature	: 23.0 ± 3.0	°C
Relative Humidity	: 55.0 ± 15.0	%RH
Atmospheric Pressure	: 1010± 10	hPa

PLACE OF CALIBRATION : Eiffel-type wind tunnel of Jiranatee Associates Co., Ltd.

CALIBRATION CONDITION

: Wind tunnel cross-section area[1]	900	cm^2
Win direction frontal area[2]	129	cm^2
Diameter of mounting pipe[3]	-	mm
Blockage ratio of test object[4]	0.143	[-]

Preconditioning : 24 hours at ambient conditions.
Measurement Condition : The average values during measurement are (23.8)°C, (43.0) %RH and (1011.6) hPa.

Calibration procedure:
The wind direction sensor was calibrated against Standard Rotary Encoder model: AX4009TS-DM04-P3-S-U0 in an close test-section of Eiffel-type wind tunnel with 900 cm^2 cross test section area. The WI-CL-008 based on IEC 61400-12-1, Wind energy generation systems – Part 12-1: Power performance measurements of electricity producing wind turbines, March 2017 was used as a calibration guideline.

Traceability:
This certificate provides a traceability of The measurement to recognized the national standards, and to realization of the international system of units (SI) through the NIMT (National Metrology Institute of Thailand) via Certificate number: DA-0043-22

Uncertainty of Measurement:
The reported uncertainty of measurement is based on the standard uncertainty multiplied by a coverage factor k=2, Which for a normal distribution corresponds to a coverage probability of approximately 95%. The standard uncertainty has been determined in accordance with the GUM 'Evaluation of measurement data - Guide to the expression of uncertainty in measurement'

TABULATION OF RESULTS:
The table on next page give the measured values.

Calibrated by:
☑ Mr. Sorawit Thachalad
☐ Miss Jittraporn Lertsomphol

JIRANATEE ASSOCIATES CO.,LTD.

Approved sign [redacted]
Calibration Department Manager

Remark:
[1] Nozzle cross-section area of the wind tunnel
[2] Projected cross-section area of the tested object include mounting pipe
[3] Diameter of mounting pipe
[4] Ratio [2] to [1]

THIS CERTIFICATE OF CALIBRATION MAY NOT BE REPRODUCED EXCEPT IN FULL UNLESS PERMISSION FOR REPRODUCTION HAS BEEN OBTAINED IN WRITING FROM THE LABORATORY

Certificate Number
CWD-001-66

MEASUREMENT RESULTS [5]

The wind direction sensor was calibrated against standard rotary encoder by comparison method. During calibration, the measurement was carried out at 45° intervals in clockwise and counterclockwise directions after offset adjustment has been made. The flow speed of wind tunnel (usually 5 m/s) is kept constant while the sensor is rotated around its vertical axis. The results of calibration and associated measurement uncertainties are reported in the table below.

Air speed m/s	D^{6}_{std} Degree (°)	D^{7}_{uuc} Degree (°)	Error Degree (°)	U (k=2) Degree (°)
5.00	45.000	41	-4	1.0
	90.000	87	-3	1.0
	135.000	132	-3	1.0
	180.000	180	0	1.0
	225.000	228	3	1.0
	270.000	273	3	1.0
	315.000	318	3	1.0
	360.000	359	-1	1.0

Remark:

[5] Calibration results only count for the tested circumstances and environmental conditions during which calibration took place

[6] Direction of standard

[7] Direction of Unit Under Calibration

*****End of Certificate of Calibration*****

JNAC
JIRANATEE ASSOCIATES CO.,LTD.

Jiranatee Associates Co., Ltd.

63/14-15,67/35-36, Soi Petchkasem7,7/1, Petchkasem Rd,
Watthapra, Bangkokyai, Bangkok 10600 Thailand.
Tel.: (66) 02-8680812#13 Fax.: (66) 02-8680860 www.jiranatee.com

NSC - TISI - TIS 17025
CALIBRATION 0367

CERTIFICATE OF CALIBRATION

Certificate No. : CDT-037-66

Equipment Name: Data Logger with Temperature sensor
Manufacturer: Novalynx
Model: 110-WS-25DL-D
Serial No.: A5662
ID No.: RYG_FS0544

Customer
Name: ALS laboratory group (Thailand) Co., Ltd.
Address: 104 Phatthanakan 40, Phatthanakan Rd., Khwaeng Suan Luang, Khet Suan Luang, Bangkok 10250 Thailand.

Received date: 11 Jul 2023
Calibration date: 21 Jul 2023
Issue date: 21 Jul 2023

Reference Used During Calibration
1.Standard Temperature Probe Model: STS-100 A500, Serial No.: 667682-09, Due date: 28 Mar 2024
2.Digital Temperature Indicator Model: DTI-1000-A MK II, Serial No.: 671407-00591 Due date: 22 July 2023

Calibration Condition
Temperature: (23±3)˚C
Relative Humidity: (55±15)%

Calibration Procedure
The temperature calibration was done by In-House calibration method as WI-CL-001 according to comparison method with standard digital temperature indicator and standard temperature probe. The temperature scale use was based on ITS-90.

Traceability
The measurement results are traceable to the international system of units (SI) through National Institute of Metrology Thailand (NIMT) Certificate number: TT-0038-23, Certificate number: ER-0092-22

Noted: *The certificate is valid only to the item calibrated on date and place of calibration.*

[redacted]

Calibrated by
☐ Mr. Sorawit Thachalad
☑ Miss Jittraporn Lertsomphol
☐ Miss Ruangrumpai Phoommit

JIRANATEE ASSOCIATES CO.,LTD.

Approved Signatory: .....
Mr. Parinya Booncharoen
Calibration Department Manager

THIS CERTIFICATE MAY NOT BE REPRODUCED EXCEPT IN FULL UNLESS PERMISSION FOR REPRODUCTION HAS BEEN OBTAINED IN WRITING FROM THE LABORATORY.

JIRANATEE ASSOCIATES CO.,LTD.
63/14-15,67/35-36, Soi Petchkasem7,7/1, Petchkasem Rd,
Watthapra, Bangkokyai, Bangkok 10600 Thailand.
Tel.: (66) 02-8680812#13 Fax.: (66) 02-8680860 www.jiranatee.com

NSC - TISI - TIS 17025
CALIBRATION 0367

Result of Calibration:- ☑ Without Adjustment ☐ With Adjustment

Calibration Range: 20-40 ˚C

Function:

This equipment was connected with temperature sensor Model: HMP60 S/N: T2320591.

Dimension : Diameter 12 mm. Length 80 mm.

Immersion Depth (mm)	Standard Reading (˚C)	UUC Reading (˚C)	Error (˚C)	Uncertainty (˚C)
70	20.060	19.6	-0.5	0.099
70	25.054	24.6	-0.5	0.099
70	30.050	29.7	-0.3	0.14
70	35.043	34.5	-0.5	0.099
70	40.036	39.5	-0.5	0.14

UUC* : Unit Under Calibration
The reported expanded uncertainty is based on standard uncertainty multiplied by a coverage factor k=2 providing a level of confidence of approximately 95%.

✱ End of Certificate ✱

JIRANATEE ASSOCIATES CO.,LTD.

63/14-15,67/35-36, Soi Petchkasem7,7/1, Petchkasem Rd,
Watthapra, Bangkokyai,Bangkok 10600 Thailand.
Tel.: (66) 02-8680812#13 Fax.: (66) 02-8680860 www.jiranatee.com

CERTIFICATE OF CALIBRATION

Calibration No. : RH-01072023

Measurement Item : Relative humidity with data logger
Manufacturer : Novalynx
Model/Type : 110-WS-25DL-D
Serial Number : A5662
ID No. : RYG_FS0544
Customer : ALS laboratory group (Thailand) Co., Ltd.
: 104 Phatthanakan 40, Phatthanakan Rd., Khwaeng Suan Luang, Khet Suan Luang, Bangkok 10250 Thailand.

Environmental Condition:
The measurement was carried out in an ambient temperature of (25±3)°C, and relative humidity of (50±15)%.

Measurement Method:
Unit Under Calibration (UUC) was calibrated by comparison method with standard chilled mirror hygrometer model: 1860-3 in the humidity generator chamber to determine the errors.

Traceability:
This instrument was calibrated using standard equipment whose accuracy is traceability through National Institute of Standards and Technology to the international system of units (SI) via MCS Calibration, Inc. Certificate number: 20926-601. Due date: Sep 26, 2024.

Measurement Date : Jul 21, 2023
Issued Date : Jul 21, 2023

Measurement Results:
This equipment was connected with Indoor air quality probe and Displayed (UR) on display. Model: HMP60, Serial number: T2320591.
Calibration was performed in the range of 20%RH to 80%RH
The results of calibration are reported in table below.

Determined (%RH)	Standard (Reading) (%RH)	UUC (Reading) (%RH)	Error (%RH)	Uncertainty ±(%RH)
20	20.07	16.3	-3.8	0.51
50	50.23	45.0	-5.2	0.51
80	80.23	73.5	-6.7	0.51

Performed by
☐ Mr. Sorawit Thachalad
☑ Miss Jittraporn Lertsomphol
☐ Miss Ruangrumpai Phoommit

JIRANATEE ASSOCIATES CO.,LTD.

Approved Signatory: [redacted]
Mr. Parinya Booncharoen.
Calibration Department Manager

THIS CALIBRATION REPORT MAY NOT BE REPRODUCED EXCEPT IN FULL UNLESS PERMISSION FOR REPRODUCTION HAS BEEN OBTAINED IN WRITING FROM THE LABORATORY.

SITHIPORN ASSOCIATES CO.,LTD.
CALIBRATION LABORATORY

451-451/1 Sirinthorn Rd.,Bangbumru, Bangplud Bangkok 10700 THAILAND.
Tel.0-2435-8800 Fax.0-2433-1679 e-mail:cal-center@sithiphorn.com http://www.sithiphorn.com

NSC-TISI-TIS 17025
CALIBRATION 0394

Cert. No. : ACC23030
Pages : 1 of 3

Calibration Certificate

Equipment :	SOUND CALIBRATOR
Manufacturer :	RION
Model :	NC-74
Serial No.:	34178124
ID No.:	RYG_FS0216

REVIEW BY ....[redacted]
APPROVED BY [redacted]
NEXT CAL. DATE 2019/24

Condition As Found :	GOOD
Customer :	ALS LABORATORY GROUP (THAILAND) CO., LTD. 104 PHATTHANAKAN 40, PHATTHANAKAN ROAD, KHWAENG PHATTHANAKAN, KHET SUAN LUANG, BANGKOK, 10250 THAILAND.

Location :	-	
Ambient Temperature :	(23.0 ± 3)	°C
Pressure :	(101.3 ± 3)	kPa
Relative Humidity :	(50.0 ± 20)	%

Received Date :	07 SEPTEMBER 2023
Calibration Date :	20 SEPTEMBER 2023
Date of Issue :	20 SEPTEMBER 2023

Calibrated by : Nathakorn Pisutpaisan

Approved by : [redacted]

This certificate is issued in accordance with the requirements of ISO/IEC 17025 standard, may not be reproduced other than in full, except with the prior written approval of the head of Calibration Laboratory.

Continuation of Calibration Certificate

Cert. No. : ACC23030
Job No. : VC66AC0100
Pages : 2 of 3

Calibration Procedure : CP-AC-03

Calibration Method :

This equipment was calibrated by based on IEC-60942-2003 Standard.

The sound pressure level, frequency and total distortion of the sound calibrator was measured using the reference microphone.

Condition of this result of calibration :

1. Reference Standard Instruments :

Instrument	Model	Serial No.	Cert. No.	Due Date
Waveform Generator	33511B	MY52302742	EF-0010-23	07-FEB-24
Digital Multimeter	33461A	MY53220104	EEL.BP 30/0266	13-FEB-24
Digital Multimeter	33461A	MY53220076	EEL.BP 30/0267	13-FEB-24
Digital Multimeter	33461A	MY60024273	EEL.BP 31/0266	14-FEB-24
Programmable Attenuator	MAT-1070	62100114	EF-0011-23	08-FEB-24
Condenser Microphone	4180	2977900	AA-1001-23	14-FEB-24
Measuring Amplifier	NA-42KAI	34560495	AA-3002-23	14-FEB-24
Audio Analyzer	AVR-3360A	V744B6069	EF-0012-23	10-FEB-24

2. This result of calibration was found accurate as shown on date and place of calibration for this calibrated item only.
3. This certificate is traceable to the international system of unit maintained at :
   3.1 National Institute of Metrology (Thailand).
   3.2 Thailand Institute of Scientific and Technological Research (TISTR).

[redacted]

Result of calibration :

1. Sound pressure level

Specified sound pressure level (dB)	Measured value (dB)	Deviated value (dB)	Uncertainty (dB)	Acceptance limit (dB)
94	94.23	0.23	0.14	0.40

2. Frequency

Specified Frequency (Hz)	Measured value (Hz)	Deviated value (%)	Uncertainty (%)	Acceptance limit (%)
1000	1001.3	0.1	0.1	1.0

3. Total distortion

Measured value (%)	Uncertainty (%)	Acceptance limit (%)
1.96	0.10	3.0

The reported uncertainty is based on a standard uncertainty multiplied by coverage factor $k = 2$ or any value following calculation,providing a lavel of confidence of approximately 95 %

End of Calibration Certificate

[redacted]

SITHIPORN ASSOCIATES CO.,LTD.
CALIBRATION LABORATORY

451-451/1 Sirinthorn Rd.,Bangbumru, Bangplud Bangkok 10700 THAILAND.
Tel.0-2435-8800 Fax.0-2433-1679 e-mail:cal-center@sithiphorn.com http://www.sithiphorn.com

NSC-TISI-TIS 17025
CALIBRATION 0394

Calibration Certificate

Equipment :	SOUND LEVEL METER
Manufacturer :	RION
Model :	NL-42/ Microphone UC-52 / Preamplifier NH-24
Serial No.:	00572561 / 170398 / 72899
ID No.:	RYG_FS0300

Condition As Found : GOOD

Customer : ALS LABORATORY GROUP (THAILAND) CO., LTD.
104 PHATTHANAKAN 40, PHATTHANAKAN ROAD,
KHWAENG PHATTHANAKAN, KHET SUAN LUANG,
BANGKOK, 10250 THAILAND.

[redacted]

Location :	-	
Ambient Temperature :	(23.0 ± 3)	°C
Pressure :	(101.3 ± 3)	kPa
Relative Humidity :	(50.0 ± 20)	%

REVIEW BY
APPROVED
NEXT CAL. D

Received Date :	23 AUGUST 2023
Calibration Date :	01 SEPTEMBER 2023
Date of Issue :	04 SEPTEMBER 2023

Calibrated by : Nathakorn Pisutpaisan

Approved by : [redacted]

(Thanakul Petchurai)

This certificate is issued in accordance with the requirements of ISO/IEC 17025 standard, may not be reproduced other than in full, except with the prior written approval of the head of Calibration Laboratory.

Continuation of Calibration Certificate

Calibration Procedure : CP-AC-01

Calibration Method :

This equipment was calibrated by based on IEC-61672-3 (2013) Standard for sound level meter (SLM).

The SLM had tests to Acoustical and Electrical signal tests of frequency weighting with Anechoic chamber and Reference Standard Instruments.

For tests results of each items were made by observation of each Instruments display and also with SLM's display.

Condition of this result of calibration :

1. Reference Standard Instruments :

Instrument	Model	Serial No.	Cert. No.	Due Date
Waveform Generator	33210A	MY48017076	EF-0009-23	07-FEB-24
Waveform Generator	33511B	MY52302742	EF-0010-23	07-FEB-24
Digital Multimeter	33461A	MY53220104	EEL.BP 30/0266	13-FEB-24
Digital Multimeter	33461A	MY53220076	EEL.BP 29/0266	13-FEB-24
Digital Multimeter	34461A	MY60024273	EEL.BP 31/0266	14-FEB-24
Programmable Attenuator	MAT-1070	62100114	EF-0011-23	08-FEB-24
Condenser Microphone	4180	2977900	AA-1001-23	14-FEB-24
Measuring Amplifier	NA-42KAI	34560495	AA-3002-23	14-FEB-24

2. This result of calibration was found accurate as shown on date and place of calibration for this calibrated item only.
3. This certificate is traceable to the international system of unit maintained at :
   3.1 National Institute of Metrology (Thailand).
   3.2 Thailand Institute of Scientific and Technological Research (TISTR).

[redacted]

Summary of Measurement Result :

Parameter	Pass	Fail	Uncertainty (dB)	Maximum-permitted uncertainty of measurement (dB)
1. Absolute sensitivity	✓	-	0.2	N/A
2. Self-generated noise	✓	-	0.2	N/A
3. Acoustical signal tests of frequency weightings				
125 Hz	✓	-	0.3	0.6
1000 Hz	✓	-	0.3	0.6
8000 Hz	✓	-	0.3	0.7
4. Electrical signal tests of frequency weightings				
For 10 Hz to 4 kHz	✓	-	0.3	0.6
For > 4 kHz to 10 kHz	✓	-	0.3	0.7
For > 10 kHz to 20 kHz	-	-	-	1.0
5. Frequency and time weightings at 1 kHz	✓	-	0.2	0.2
6. Long - term stability	✓	-	0.1	0.1
7. Level linearity on the reference level range	✓	-	0.2	0.3
8. Level linearity including the level range control	✓	-	0.2	0.3
9. Tone burst response	✓	-	0.2	0.3
10. Peak C sound level	✓	-	0.2	0.35
11. Overload indication	✓	-	0.2	0.25
12. High level stability	✓	-	0.1	0.1

Note : Pass/Fail evaluation for each parameter,
will be considered together from the acceptance limit and the Maximum-permitted uncertainty of measurement.

[redacted]

Result of calibration :

1. Absolute sensitivity

Reference Acoustic Signal (dB)	Measured Value (dB)	Deviation (dB)	Acceptance Limit (dB)
93.9 (93.98)	93.9	0.0	±0.3

2. Self-generated noise

2.1 Normal test

Measured Value (dB)
16.1

2.2 The microphone of the sound level meter was replaced by electrical signal input device.

Frequency Weighting	Measured value (dB)
A - weight	12.0
C - weight	18.2
Flat	24.0

3. Acoustical signal tests of frequency weightings

Meter free-field acoustic response at a level of 84 dB

Frequency (Hz)	Deviation from various frequency weighting response curve (dB)			
	Flat	C-weight	A-weight	Acceptance Limits
125	0.2	0.2	0.2	± 1.5
1000	-0.1	-0.1	-0.1	± 1.0
8000	0.3	0.4	0.4	±5.0

[redacted]

4. Electrical signal tests of frequency weightings

Weighting network response with relative to 1 kHz.

Frequency (Hz)	Deviation from various frequency weighting response curve (dB)			
	Flat	C-weight	A-weight	Acceptance Limits
63	0.0	-0.1	0.0	±2.0
125	0.0	0.0	0.0	±1.5
250	0.0	0.0	0.0	±1.5
500	0.0	0.1	0.0	±1.5
1000	0.0	0.0	0.0	±1.0
2000	0.0	0.1	0.0	±2.0
4000	0.0	0.0	0.0	±3.0
8000	0.0	0.1	0.1	±5.0

5. Frequency and time weightings at 1 kHz

5.1 Frequency weightings at 1 kHz

Frequency Weighting	Anticipated Value (dB)	Measured Value (dB)	Deviated Value (dB)	Acceptance Limits (dB)
A - weight	94.0	94.0	0.0	± 0.2
C - weight	94.0	94.0	0.0	± 0.2
Flat	94.0	94.0	0.0	± 0.2

5.2 Time weighting at 1 kHz

Frequency Weighting	Anticipated Value (dB)	Measured Value (dB)	Deviated Value (dB)	Acceptance Limits (dB)
Fast	94.0	94.0	0.0	± 0.1
Slow	94.0	94.0	0.0	± 0.1
Leq	94.0	94.0	0.0	± 0.1

6. Long - term stability

Frequency Weighting	SLM Display at initial (dB)	SLM Display at final (dB)	Deviated Value (dB)	Acceptance Limits (dB)
A - weight	94.0	94.0	0.0	± 0.3

[redacted]

7. Level linearity on the reference level range

Anticipated Value (dB)	Measured Value (dB)	Deviated Value (dB)	Acceptance Limits (dB)
137.0	137.0	0.0	± 1.1
136.0	136.0	0.0	± 1.1
135.0	135.0	0.0	± 1.1
134.0	134.0	0.0	± 1.1
133.0	133.0	0.0	± 1.1
132.0	132.0	0.0	± 1.1
131.0	131.0	0.0	± 1.1
129.0	129.0	0.0	± 1.1
124.0	124.0	0.0	± 1.1
119.0	119.0	0.0	± 1.1
114.0	114.0	0.0	± 1.1
109.0	109.0	0.0	± 1.1
104.0	104.0	0.0	± 1.1
99.0	99.0	0.0	± 1.1
94.0	94.0	0.0	± 1.1
89.0	89.0	0.0	± 1.1
84.0	84.0	0.0	± 1.1
79.0	79.0	0.0	± 1.1
74.0	74.0	0.0	± 1.1
69.0	69.0	0.0	± 1.1
64.0	64.0	0.0	± 1.1
59.0	59.0	0.0	± 1.1
54.0	54.0	0.0	± 1.1
49.0	49.0	0.0	± 1.1
44.0	44.0	0.0	± 1.1
39.0	39.0	0.0	± 1.1
34.0	34.0	0.0	± 1.1
30.0	30.0	0.0	± 1.1
29.0	28.9	-0.1	± 1.1
28.0	27.9	-0.1	± 1.1
27.0	26.9	-0.1	± 1.1
26.0	25.9	-0.1	± 1.1
25.0	24.9	-0.1	± 1.1

[redacted]

8. Level linearity including the level range control

Range	Anticipated Value (dB)	Measured Value (dB)	Deviated Value (dB)	Acceptance Limits (dB)
Auto	94.0	94.0	0.0	±1.1

9. Tone burst response

Time Weighting	Tone burst duration, Tb (ms)	Cycle	Anticipated Value (dB)	Measured Value (dB)	Deviated Value (dB)	Acceptance Limits (dB)
Fast	0.25	1	108.0	107.9	-0.1	1.5 ; -5.0
	2	8	117.0	117.0	0.0	1.0 ; -2.5
	200	800	134.0	134.1	0.1	±1.0
Slow	2	8	108.0	108.0	0.0	1.5 ; -5.0
	200	800	127.6	127.6	0.0	±1.0
SEL	0.25	1	99.0	98.9	-0.1	1.5 ; -5.0
	2	8	108.0	108.0	0.0	1.0 ; -2.5
	200	800	128.0	128.0	0.0	±1.0

10. Peak C sound level

Number of cycle in test signal	Anticipated Value (dB)	Measured Value, Lcpeak (dB)	Deviated Value (dB)	Acceptance Limits (dB)
Continuous	133.0	133.0	0.0	±3.0
One	136.4	135.7	-0.7	±3.0

Number of cycle in test signal	Anticipated Value (dB)	Measured Value (dB)	Deviated Value (dB)	Acceptance Limits (dB)
Continuous	133.0	133.0	0.0	±2.0
Positive half cycle	135.4	135.2	-0.2	±2.0
Negative half cycle	135.4	135.2	-0.2	±2.0

[redacted]

11. Overload indication

Measured value (dB)		Deviated Value (dB)	Acceptance Limits (dB)
Positive one-half cycle	Negative one-half cycle		
89.7	89.5	-0.2	±1.5

12. High level stability

Frequency Weighting	SLM Display at initial (dB)	SLM Display at final (dB)	Deviated Value (dB)	Acceptance Limits (dB)
A - weight	137.1	137.0	0.1	±0.3

The reported uncertainty is based on a standard uncertainty multiplied by coverage factor $k = 2$ or any value following calculation,providing a lavel of confidence of approximately 95 %

End of Calibration Certificate

[redacted]

SITHIPORN ASSOCIATES CO.,LTD.
CALIBRATION LABORATORY

451-451/1 Sirinthorn Rd.,Bangbumru, Bangplud Bangkok 10700 THAILAND.
Tel.0-2435-8800 Fax.0-2433-1679 e-mail:cal-center@sithiphorn.com http://www.sithiphorn.com

NSC-TISI-TIS 17025
CALIBRATION 0394

Cert. No. : ACL23086

Calibration Certificate

Equipment :	SOUND LEVEL METER
Manufacturer :	RION
Model :	NL-42/ Microphone UC-52 / Preamplifier NH-24
Serial No.:	01222723 / 143841 / 22770
ID No.:	RYG_FS0022

Condition As Found : GOOD

Customer : ALS LABORATORY GROUP (THAILAND) CO., LTD.
104 PHATTHANAKAN 40, PHATTHANAKAN ROAD,
KHWAENG PHATTHANAKAN, KHET SUAN LUANG,
BANGKOK, 10250 THAILAND.

Location :	-	
Ambient Temperature :	(23.0 ± 3)	°C
Pressure :	(101.3 ± 3)	kPa
Relative Humidity :	(50.0 ± 20)	%

REVIEW BY [redacted]
APPROVED [redacted]
NEXT CAL. D[redacted]

Received Date :	24 JANUARY 2023
Calibration Date :	25-26 JANUARY 2023
Date of Issue :	27 JANUARY 2023

Calibrated by : Nathakorn Pisutpaisan

Approved by : [redacted]

(Thanakul Petchurai)

This certificate is issued in accordance with the requirements of ISO/IEC 17025 standard, may not be reproduced other than in full, except with the prior written approval of the head of Calibration Laboratory.

Continuation of Calibration Certificate

Calibration Procedure : CP-AC-01

Calibration Method :

This equipment was calibrated by based on IEC-61672-3 (2013) Standard for sound level meter (SLM).

The SLM had tests to Acoustical and Electrical signal tests of frequency weighting with Anechoic chamber and Reference Standard Instruments.

For tests results of each items were made by observation of each Instruments display and also with SLM's display.

Condition of this result of calibration :

1. Reference Standard Instruments :

Instrument	Model	Serial No.	Cert. No.	Due Date
Waveform Generator	33210A	MY48017076	EF-0007-22	04-Feb-23
Waveform Generator	33511B	MY52302742	EF-0008-22	04-Feb-23
Digital Multimeter	33461A	MY53220104	EEL.BP. 04/0265	09-Feb-23
Digital Multimeter	33461A	MY53220076	EEL.BP. 03/0265	09-Feb-23
Digital Multimeter	34461A	MY60024273	EEL.BP. 05/0265	09-Feb-23
Programmable Attenuator	MAT-1070	62100114	EF-0009-22	07-Feb-23
Condenser Microphone	4180	2977900	AA-1013-22	24-Feb-23
Measuring Amplifier	NA-42KAI	34560495	AA-3005-22	22-Feb-23

2. This result of calibration was found accurate as shown on date and place of calibration for this calibrated item only.
3. This certificate is traceable to the international system of unit maintained at :
   3.1 National Institute of Metrology (Thailand).
   3.2 Thailand Institute of Scientific and Technological Research (TISTR).

[redacted]

Summary of Measurement Result :

Parameter	Pass	Fail	Uncertainty (dB)	Maximum-permitted uncertainty of measurement (dB)
1. Absolute sensitivity	✓	-	0.2	N/A
2. Self-generated noise	✓	-	0.2	N/A
3. Acoustical signal tests of frequency weightings				
125 Hz	✓	-	0.3	0.6
1000 Hz	✓	-	0.3	0.6
8000 Hz	✓	-	0.3	0.7
4. Electrical signal tests of frequency weightings				
For 10 Hz to 4 kHz	✓	-	0.3	0.6
For > 4 kHz to 10 kHz	✓	-	0.3	0.7
For > 10 kHz to 20 kHz	-	-	-	1.0
5. Frequency and time weightings at 1 kHz	✓	-	0.2	0.2
6. Long - term stability	✓	-	0.1	0.1
7. Level linearity on the reference level range	✓	-	0.2	0.3
8. Level linearity including the level range control	✓	-	0.2	0.3
9. Tone burst response	✓	-	0.2	0.3
10. Peak C sound level	✓	-	0.2	0.35
11. Overload indication	✓	-	0.2	0.25
12. High level stability	✓	-	0.1	0.1

[redacted]

Result of calibration :

1. Absolute sensitivity

Reference Acoustic Signal (dB)	Measured Value (dB)	Deviation (dB)	Acceptance Limit (dB)
93.9 (93.95)	93.9	0.0	±0.3

2. Self-generated noise

2.1 Normal test

Measured Value (dB)
15.1

2.2 The microphone of the sound level meter was replaced by electrical signal input device.

Frequency Weighting	Measured value (dB)
A - weight	12.0
C - weight	18.3
Flat	24.0

3. Acoustical signal tests of frequency weightings

Meter free-field acoustic response at a level of 84 dB

Frequency (Hz)	Deviation from various frequency weighting response curve (dB)			
	Flat	C-weight	A-weight	Acceptance Limits
125	0.5	0.5	0.6	± 1.5
1000	0.0	-0.1	-0.1	± 1.0
8000	-0.1	0.0	0.0	±5.0

[redacted]

4. Electrical signal tests of frequency weightings

Weighting network response with relative to 1 kHz.

Frequency (Hz)	Deviation from various frequency weighting response curve (dB)			
	Flat	C-weight	A-weight	Acceptance Limits
63	0.0	0.0	0.0	±2.0
125	0.0	0.0	0.0	±1.5
250	0.0	0.0	0.0	±1.5
500	0.0	0.0	0.0	±1.5
1000	0.0	0.0	0.0	±1.0
2000	0.0	0.0	0.0	±2.0
4000	0.0	0.0	0.0	±3.0
8000	0.0	0.1	0.1	±5.0

5. Frequency and time weightings at 1 kHz

5.1 Frequency weightings at 1 kHz

Frequency Weighting	Measured Value (dB)	Deviated Value (dB)	Acceptance Limits (dB)
A - weight	94.0	0.0	-
C - weight	94.0	0.0	± 0.2
Flat	94.0	0.0	± 0.2

5.2 Time weighting at 1 kHz

Frequency Weighting	Measured Value (dB)	Deviated Value (dB)	Acceptance Limits (dB)
Fast	94.0	0.0	-
Slow	94.0	0.0	± 0.1
Leq	94.0	0.0	± 0.1

6. Long - term stability

Frequency Weighting	SLM Display at initial (dB)	SLM Display at final (dB)	Deviated Value (dB)	Acceptance Limits (dB)
A - weight	94.0	94.0	0.0	± 0.3

[redacted]

7. Level linearity on the reference level range

Anticipated Value (dB)	Measured Value (dB)	Deviated Value (dB)	Acceptance Limits (dB)
137.0	137.0	0.0	± 1.1
136.0	136.0	0.0	± 1.1
135.0	135.0	0.0	± 1.1
134.0	134.0	0.0	± 1.1
133.0	133.0	0.0	± 1.1
132.0	132.0	0.0	± 1.1
131.0	131.0	0.0	± 1.1
129.0	129.0	0.0	± 1.1
124.0	124.0	0.0	± 1.1
119.0	119.0	0.0	± 1.1
114.0	114.0	0.0	± 1.1
109.0	109.0	0.0	± 1.1
104.0	104.0	0.0	± 1.1
99.0	99.0	0.0	± 1.1
94.0	94.0	0.0	± 1.1
89.0	89.0	0.0	± 1.1
84.0	84.0	0.0	± 1.1
79.0	79.0	0.0	± 1.1
74.0	74.0	0.0	± 1.1
69.0	69.0	0.0	± 1.1
64.0	64.0	0.0	± 1.1
59.0	59.0	0.0	± 1.1
54.0	53.9	-0.1	± 1.1
49.0	49.0	0.0	± 1.1
44.0	44.0	0.0	± 1.1
39.0	38.9	-0.1	± 1.1
34.0	33.9	-0.1	± 1.1
30.0	29.9	-0.1	± 1.1
29.0	28.9	-0.1	± 1.1
28.0	27.9	-0.1	± 1.1
27.0	26.9	-0.1	± 1.1
26.0	25.9	-0.1	± 1.1
25.0	24.8	-0.2	± 1.1

[redacted]

8. Level linearity including the level range control

Range	Anticipated Value (dB)	Measured Value (dB)	Deviated Value (dB)	Acceptance Limits (dB)
Auto	94.0	94.0	0.0	±1.1

9. Tone burst response

Time Weighting	Tone burst duration, Tb (ms)	Cycle	Anticipated Value (dB)	Measured Value (dB)	Deviated Value (dB)	Acceptance Limits (dB)
Fast	0.25	1	108.0	107.9	-0.1	1.5 ; -5.0
	2	8	117.0	117.0	0.0	1.0 ; -2.5
	200	800	134.0	134.0	0.0	±1.0
Slow	2	8	108.0	108.0	0.0	1.5 ; -5.0
	200	800	127.6	127.6	0.0	±1.0
SEL	0.25	1	99.0	98.9	-0.1	1.5 ; -5.0
	2	8	108.0	108.0	0.0	1.0 ; -2.5
	200	800	128.0	128.0	0.0	±1.0

10. Peak C sound level

Number of cycle in test signal	Anticipated Value (dB)	Measured Value, Lcpeak (dB)	Deviated Value (dB)	Acceptance Limits (dB)
Continuous	133.0	133.0	0.0	-
One	136.4	136.1	-0.3	±3.0

Number of cycle in test signal	Anticipated Value (dB)	Measured Value (dB)	Deviated Value (dB)	Acceptance Limits (dB)
Continuous	133.0	133.0	0.0	-
Positive half cycle	135.4	135.2	-0.2	±2.0
Negative half cycle	135.4	135.2	-0.2	±2.0

[redacted]

11. Overload indication

Measured value (dB)		Deviated Value (dB)	Acceptance Limits (dB)
Positive one-half cycle	Negative one-half cycle		
89.6	89.5	-0.1	±1.5

12. High level stability

Frequency Weighting	SLM Display at initial (dB)	SLM Display at final (dB)	Deviated Value (dB)	Acceptance Limits (dB)
A - weight	137.0	137.0	0.0	±0.3

The reported uncertainty is based on a standard uncertainty multiplied by coverage factor $k = 2$ or any value following calculation,providing a lavel of confidence of approximately 95 %

End of Calibration Certificate

[redacted]

SITHIPORN ASSOCIATES CO.,LTD.
CALIBRATION LABORATORY

451-451/1 Sirinthorn Rd.,Bangbumru, Bangplud Bangkok 10700 THAILAND.
Tel.0-2435-8800 Fax.0-2433-1679 e-mail:cal-center@sithiphorn.com http://www.sithiphorn.com

NSC-TISI-TIS 17025
CALIBRATION 0394

Calibration Certificate

Equipment :	SOUND LEVEL METER
Manufacturer :	RION
Model :	NL-42/ Microphone UC-52 / Preamplifier NH-24
Serial No.:	00472127 / 169440 / 72461
ID No.:	RYG_FS0302

Condition As Found : GOOD

Customer : ALS LABORATORY GROUP (THAILAND) CO., LTD.
104 PHATTHANAKAN 40, PHATTHANAKAN ROAD,
KHWAENG PHATTHANAKAN, KHET SUAN LUANG,
BANGKOK, 10250 THAILAND.

Location :	-	
Ambient Temperature :	(23.0 ± 3)	°C
Pressure :	(101.3 ± 3)	kPa
Relative Humidity :	(50.0 ± 20)	%

REVIEW B[redacted]
APPROVE[redacted]
NEXT CAL[redacted]

Received Date :	13 JULY 2023
Calibration Date :	10 AUGUST 2023
Date of Issue :	11 AUGUST 2023

Calibrated by : Nathakorn Pisutpaisan

Approved by : [redacted]

(Thanakul Petchurai)

This certificate is issued in accordance with the requirements of ISO/IEC 17025 standard, may not be reproduced other than in full, except with the prior written approval of the head of Calibration Laboratory.

Continuation of Calibration Certificate

Calibration Procedure : CP-AC-01

Calibration Method :

This equipment was calibrated by based on IEC-61672-3 (2013) Standard for sound level meter (SLM).

The SLM had tests to Acoustical and Electrical signal tests of frequency weighting with Anechoic chamber and Reference Standard Instruments.

For tests results of each items were made by observation of each Instruments display and also with SLM's display.

Condition of this result of calibration :

1. Reference Standard Instruments :

Instrument	Model	Serial No.	Cert. No.	Due Date
Waveform Generator	33210A	MY48017076	EF-0009-23	07-FEB-24
Waveform Generator	33511B	MY52302742	EF-0010-23	07-FEB-24
Digital Multimeter	33461A	MY53220104	EEL.BP 30/0266	13-FEB-24
Digital Multimeter	33461A	MY53220076	EEL.BP 29/0266	13-FEB-24
Digital Multimeter	34461A	MY60024273	EEL.BP 31/0266	14-FEB-24
Programmable Attenuator	MAT-1070	62100114	EF-0011-23	08-FEB-24
Condenser Microphone	4180	2977900	AA-1001-23	14-FEB-24
Measuring Amplifier	NA-42KAI	34560495	AA-3002-23	14-FEB-24

2. This result of calibration was found accurate as shown on date and place of calibration for this calibrated item only.
3. This certificate is traceable to the international system of unit maintained at :
   3.1 National Institute of Metrology (Thailand).
   3.2 Thailand Institute of Scientific and Technological Research (TISTR).

[redacted]

Summary of Measurement Result :

Parameter	Pass	Fail	Uncertainty (dB)	Maximum-permitted uncertainty of measurement (dB)
1. Absolute sensitivity	✓	-	0.2	N/A
2. Self-generated noise	✓	-	0.2	N/A
3. Acoustical signal tests of frequency weightings				
125 Hz	✓	-	0.3	0.6
1000 Hz	✓	-	0.3	0.6
8000 Hz	✓	-	0.3	0.7
4. Electrical signal tests of frequency weightings				
For 10 Hz to 4 kHz	✓	-	0.3	0.6
For > 4 kHz to 10 kHz	✓	-	0.3	0.7
For > 10 kHz to 20 kHz	-	-	-	1.0
5. Frequency and time weightings at 1 kHz	✓	-	0.2	0.2
6. Long - term stability	✓	-	0.1	0.1
7. Level linearity on the reference level range	✓	-	0.2	0.3
8. Level linearity including the level range control	✓	-	0.2	0.3
9. Tone burst response	✓	-	0.2	0.3
10. Peak C sound level	✓	-	0.2	0.35
11. Overload indication	✓	-	0.2	0.25
12. High level stability	✓	-	0.1	0.1

Note : Pass/Fail evaluation for each parameter,
will be considered together from the acceptance limit and the Maximum-permitted uncertainty of measurement.

[redacted]

Result of calibration :

1. Absolute sensitivity

Reference Acoustic Signal (dB)	Measured Value (dB)	Deviation (dB)	Acceptance Limit (dB)
93.9 (93.98)	93.9	0.0	±0.3

2. Self-generated noise

2.1 Normal test

Measured Value (dB)
18.0

2.2 The microphone of the sound level meter was replaced by electrical signal input device.

Frequency Weighting	Measured value (dB)
A - weight	13.8
C - weight	20.3
Flat	25.9

3. Acoustical signal tests of frequency weightings

Meter free-field acoustic response at a level of 84 dB

Frequency (Hz)	Deviation from various frequency weighting response curve (dB)			
	Flat	C-weight	A-weight	Acceptance Limits
125	0.1	0.1	0.1	± 1.5
1000	-0.1	-0.1	0.0	± 1.0
8000	-0.4	-0.3	-0.3	±5.0

[redacted]

4. Electrical signal tests of frequency weightings

Weighting network response with relative to 1 kHz.

Frequency (Hz)	Deviation from various frequency weighting response curve (dB)			
	Flat	C-weight	A-weight	Acceptance Limits
63	0.0	0.0	-0.1	±2.0
125	0.0	0.0	0.0	±1.5
250	0.0	0.0	0.0	±1.5
500	0.0	0.0	0.0	±1.5
1000	0.0	0.0	0.0	±1.0
2000	0.0	0.0	0.0	±2.0
4000	0.0	0.0	0.0	±3.0
8000	0.0	0.1	0.1	±5.0

5. Frequency and time weightings at 1 kHz

5.1 Frequency weightings at 1 kHz

Frequency Weighting	Anticipated Value (dB)	Measured Value (dB)	Deviated Value (dB)	Acceptance Limits (dB)
A - weight	94.0	94.0	0.0	± 0.2
C - weight	94.0	94.0	0.0	± 0.2
Flat	94.0	94.0	0.0	± 0.2

5.2 Time weighting at 1 kHz

Frequency Weighting	Anticipated Value (dB)	Measured Value (dB)	Deviated Value (dB)	Acceptance Limits (dB)
Fast	94.0	94.0	0.0	± 0.1
Slow	94.0	94.0	0.0	± 0.1
Leq	94.0	94.0	0.0	± 0.1

6. Long - term stability

Frequency Weighting	SLM Display at initial (dB)	SLM Display at final (dB)	Deviated Value (dB)	Acceptance Limits (dB)
A - weight	94.0	94.0	0.0	± 0.3

[redacted]

7. Level linearity on the reference level range

Anticipated Value (dB)	Measured Value (dB)	Deviated Value (dB)	Acceptance Limits (dB)
137.0	137.0	0.0	± 1.1
136.0	136.0	0.0	± 1.1
135.0	135.0	0.0	± 1.1
134.0	134.0	0.0	± 1.1
133.0	133.0	0.0	± 1.1
132.0	132.0	0.0	± 1.1
131.0	131.0	0.0	± 1.1
129.0	129.0	0.0	± 1.1
124.0	124.0	0.0	± 1.1
119.0	119.0	0.0	± 1.1
114.0	114.0	0.0	± 1.1
109.0	109.0	0.0	± 1.1
104.0	104.0	0.0	± 1.1
99.0	99.0	0.0	± 1.1
94.0	94.0	0.0	± 1.1
89.0	89.0	0.0	± 1.1
84.0	84.1	0.1	± 1.1
79.0	79.0	0.0	± 1.1
74.0	74.1	0.1	± 1.1
69.0	69.0	0.0	± 1.1
64.0	64.0	0.0	± 1.1
59.0	59.0	0.0	± 1.1
54.0	54.0	0.0	± 1.1
49.0	49.0	0.0	± 1.1
44.0	44.0	0.0	± 1.1
39.0	39.0	0.0	± 1.1
34.0	34.0	0.0	± 1.1
30.0	30.0	0.0	± 1.1
29.0	29.0	0.0	± 1.1
28.0	28.1	0.1	± 1.1
27.0	27.1	0.1	± 1.1
26.0	26.2	0.2	± 1.1
25.0	25.1	0.1	± 1.1

[redacted]

8. Level linearity including the level range control

Range	Anticipated Value (dB)	Measured Value (dB)	Deviated Value (dB)	Acceptance Limits (dB)
Auto	94.0	94.0	0.0	±1.1

9. Tone burst response

Time Weighting	Tone burst duration, Tb (ms)	Cycle	Anticipated Value (dB)	Measured Value (dB)	Deviated Value (dB)	Acceptance Limits (dB)
Fast	0.25	1	108.0	107.9	-0.1	1.5 ; -5.0
	2	8	117.0	117.0	0.0	1.0 ; -2.5
	200	800	134.0	134.0	0.0	±1.0
Slow	2	8	108.0	108.0	0.0	1.5 ; -5.0
	200	800	127.6	127.6	0.0	±1.0
SEL	0.25	1	99.0	98.9	-0.1	1.5 ; -5.0
	2	8	108.0	108.0	0.0	1.0 ; -2.5
	200	800	128.0	128.0	0.0	±1.0

10. Peak C sound level

Number of cycle in test signal	Anticipated Value (dB)	Measured Value, Lcpeak (dB)	Deviated Value (dB)	Acceptance Limits (dB)
Continuous	133.0	133.0	0.0	±3.0
One	136.4	136.3	-0.1	±3.0

Number of cycle in test signal	Anticipated Value (dB)	Measured Value (dB)	Deviated Value (dB)	Acceptance Limits (dB)
Continuous	133.0	133.0	0.0	±2.0
Positive half cycle	135.4	135.2	-0.2	±2.0
Negative half cycle	135.4	135.2	-0.2	±2.0

[redacted]

11. Overload indication

Measured value (dB)		Deviated Value (dB)	Acceptance Limits (dB)
Positive one-half cycle	Negative one-half cycle		
89.6	89.7	0.1	±1.5

12. High level stability

Frequency Weighting	SLM Display at initial (dB)	SLM Display at final (dB)	Deviated Value (dB)	Acceptance Limits (dB)
A - weight	137.0	137.0	0.0	±0.3

The reported uncertainty is based on a standard uncertainty multiplied by coverage factor $k = 2$ or any value following calculation,providing a lavel of confidence of approximately 95 %

End of Calibration Certificate

[redacted]

SITHIPORN ASSOCIATES CO.,LTD.
CALIBRATION LABORATORY

451-451/1 Sirinthorn Rd.,Bangbumru, Bangplud Bangkok 10700 THAILAND.
Tel.0-2435-8800 Fax.0-2433-1679 e-mail:cal-center@sithiphorn.com http://www.sithiphorn.com

NSC-TISI-TIS 17025
CALIBRATION 0394

Calibration Certificate

Equipment :	SOUND LEVEL METER
Manufacturer :	RION
Model :	NL-42/ Microphone UC-52 / Preamplifier NH-24
Serial No.:	00472132 / 169445 / 72466
ID No.:	RYG_FS0304

Condition As Found : GOOD

Customer : ALS LABORATORY GROUP (THAILAND) CO., LTD.
104 PHATTHANAKAN 40, PHATTHANAKAN ROAD,
KHWAENG PHATTHANAKAN, KHET SUAN LUANG,
BANGKOK, 10250 THAILAND.

Location :	-	
Ambient Temperature :	(23.0 ± 3)	°C
Pressure :	(101.3 ± 3)	kPa
Relative Humidity :	(50.0 ± 20)	%

REVIEW BY .....
APPROVED BY
NEXT CAL. DATE

[redacted]

Received Date :	23 AUGUST 2023
Calibration Date :	01 SEPTEMBER 2023
Date of Issue :	04 SEPTEMBER 2023

Calibrated by : Nathakorn Pisutpaisan

Approved by : [redacted]

(Thanakul Petchurai)

This certificate is issued in accordance with the requirements of ISO/IEC 17025 standard, may not be reproduced other than in full, except with the prior written approval of the head of Calibration Laboratory.

Continuation of Calibration Certificate

Calibration Procedure : CP-AC-01

Calibration Method :

This equipment was calibrated by based on IEC-61672-3 (2013) Standard for sound level meter (SLM).

The SLM had tests to Acoustical and Electrical signal tests of frequency weighting with Anechoic chamber and Reference Standard Instruments.

For tests results of each items were made by observation of each Instruments display and also with SLM's display.

Condition of this result of calibration :

1. Reference Standard Instruments :

Instrument	Model	Serial No.	Cert. No.	Due Date
Waveform Generator	33210A	MY48017076	EF-0009-23	07-FEB-24
Waveform Generator	33511B	MY52302742	EF-0010-23	07-FEB-24
Digital Multimeter	33461A	MY53220104	EEL.BP 30/0266	13-FEB-24
Digital Multimeter	33461A	MY53220076	EEL.BP 29/0266	13-FEB-24
Digital Multimeter	34461A	MY60024273	EEL.BP 31/0266	14-FEB-24
Programmable Attenuator	MAT-1070	62100114	EF-0011-23	08-FEB-24
Condenser Microphone	4180	2977900	AA-1001-23	14-FEB-24
Measuring Amplifier	NA-42KAI	34560495	AA-3002-23	14-FEB-24

2. This result of calibration was found accurate as shown on date and place of calibration for this calibrated item only.
3. This certificate is traceable to the international system of unit maintained at :
   3.1 National Institute of Metrology (Thailand).
   3.2 Thailand Institute of Scientific and Technological Research (TISTR).

[redacted]

Summary of Measurement Result :

Parameter	Pass	Fail	Uncertainty (dB)	Maximum-permitted uncertainty of measurement (dB)
1. Absolute sensitivity	✓	-	0.2	N/A
2. Self-generated noise	✓	-	0.2	N/A
3. Acoustical signal tests of frequency weightings				
125 Hz	✓	-	0.3	0.6
1000 Hz	✓	-	0.3	0.6
8000 Hz	✓	-	0.3	0.7
4. Electrical signal tests of frequency weightings				
For 10 Hz to 4 kHz	✓	-	0.3	0.6
For > 4 kHz to 10 kHz	✓	-	0.3	0.7
For > 10 kHz to 20 kHz	-	-	-	1.0
5. Frequency and time weightings at 1 kHz	✓	-	0.2	0.2
6. Long - term stability	✓	-	0.1	0.1
7. Level linearity on the reference level range	✓	-	0.2	0.3
8. Level linearity including the level range control	✓	-	0.2	0.3
9. Tone burst response	✓	-	0.2	0.3
10. Peak C sound level	✓	-	0.2	0.35
11. Overload indication	✓	-	0.2	0.25
12. High level stability	✓	-	0.1	0.1

Note : Pass/Fail evaluation for each parameter,
will be considered together from the acceptance limit and the Maximum-permitted uncertainty of measurement.

[redacted]

Result of calibration :

1. Absolute sensitivity

Reference Acoustic Signal (dB)	Measured Value (dB)	Deviation (dB)	Acceptance Limit (dB)
93.9 (93.98)	93.9	0.0	±0.3

2. Self-generated noise

2.1 Normal test

Measured Value (dB)
16.0

2.2 The microphone of the sound level meter was replaced by electrical signal input device.

Frequency Weighting	Measured value (dB)
A - weight	8.7
C - weight	15.9
Flat	21.8

3. Acoustical signal tests of frequency weightings

Meter free-field acoustic response at a level of 84 dB

Frequency (Hz)	Deviation from various frequency weighting response curve (dB)			
	Flat	C-weight	A-weight	Acceptance Limits
125	0.3	0.3	0.3	± 1.5
1000	-0.1	-0.1	-0.1	± 1.0
8000	-1.4	-1.5	-1.5	±5.0

[redacted]

4. Electrical signal tests of frequency weightings

Weighting network response with relative to 1 kHz.

Frequency (Hz)	Deviation from various frequency weighting response curve (dB)			
	Flat	C-weight	A-weight	Acceptance Limits
63	0.0	0.0	0.0	±2.0
125	0.0	0.1	0.0	±1.5
250	0.0	0.0	0.0	±1.5
500	0.0	0.1	0.0	±1.5
1000	0.0	0.0	0.0	±1.0
2000	0.0	0.1	0.1	±2.0
4000	0.0	0.1	0.1	±3.0
8000	0.1	0.1	0.1	±5.0

5. Frequency and time weightings at 1 kHz

5.1 Frequency weightings at 1 kHz

Frequency Weighting	Anticipated Value (dB)	Measured Value (dB)	Deviated Value (dB)	Acceptance Limits (dB)
A - weight	94.0	94.0	0.0	± 0.2
C - weight	94.0	94.0	0.0	± 0.2
Flat	94.0	94.0	0.0	± 0.2

5.2 Time weighting at 1 kHz

Frequency Weighting	Anticipated Value (dB)	Measured Value (dB)	Deviated Value (dB)	Acceptance Limits (dB)
Fast	94.0	94.0	0.0	± 0.1
Slow	94.0	94.0	0.0	± 0.1
Leq	94.0	94.0	0.0	± 0.1

6. Long - term stability

Frequency Weighting	SLM Display at initial (dB)	SLM Display at final (dB)	Deviated Value (dB)	Acceptance Limits (dB)
A - weight	94.0	94.1	0.1	± 0.3

[redacted]

8. Level linearity including the level range control

Range	Anticipated Value (dB)	Measured Value (dB)	Deviated Value (dB)	Acceptance Limits (dB)
Auto	94.0	94.0	0.0	±1.1

9. Tone burst response

Time Weighting	Tone burst duration, Tb (ms)	Cycle	Anticipated Value (dB)	Measured Value (dB)	Deviated Value (dB)	Acceptance Limits (dB)
Fast	0.25	1	108.0	107.9	-0.1	1.5 ; -5.0
	2	8	117.0	116.9	-0.1	1.0 ; -2.5
	200	800	134.0	134.0	0.0	±1.0
Slow	2	8	108.0	107.9	-0.1	1.5 ; -5.0
	200	800	127.6	127.6	0.0	±1.0
SEL	0.25	1	99.0	98.8	-0.2	1.5 ; -5.0
	2	8	108.0	108.0	0.0	1.0 ; -2.5
	200	800	128.0	128.0	0.0	±1.0

10. Peak C sound level

Number of cycle in test signal	Anticipated Value (dB)	Measured Value, Lcpeak (dB)	Deviated Value (dB)	Acceptance Limits (dB)
Continuous	133.0	133.0	0.0	±3.0
One	136.4	135.5	-0.9	±3.0

Number of cycle in test signal	Anticipated Value (dB)	Measured Value (dB)	Deviated Value (dB)	Acceptance Limits (dB)
Continuous	133.0	133.0	0.0	±2.0
Positive half cycle	135.4	135.1	-0.3	±2.0
Negative half cycle	135.4	135.1	-0.3	±2.0

[redacted]

11. Overload indication

Measured value (dB)		Deviated Value (dB)	Acceptance Limits (dB)
Positive one-half cycle	Negative one-half cycle		
89.5	89.6	0.1	±1.5

12. High level stability

Frequency Weighting	SLM Display at initial (dB)	SLM Display at final (dB)	Deviated Value (dB)	Acceptance Limits (dB)
A - weight	137.0	137.0	0.0	±0.3

The reported uncertainty is based on a standard uncertainty multiplied by coverage factor $k = 2$ or any value following calculation,providing a lavel of confidence of approximately 95 %

End of Calibration Certificate

[redacted]

SITHIPORN ASSOCIATES CO.,LTD.
CALIBRATION LABORATORY

451-451/1 Sirinthorn Rd.,Bangbumru, Bangplud Bangkok 10700 THAILAND.
Tel.0-2435-8800 Fax.0-2433-1679 e-mail:cal-center@sithiphorn.com http://www.sithiphorn.com

NSC-TISI-TIS 17025
CALIBRATION 0394

Calibration Certificate

Equipment :	SOUND LEVEL METER
Manufacturer :	RION
Model :	NL-42/ Microphone UC-52 / Preamplifier NH-24
Serial No.:	00233184 / 144837 / 23232
ID No.:	RYG_FS0025
Condition As Found :	GOOD
Customer :	ALS LABORATORY GROUP (THAILAND) CO., LTD. 104 PHATTHANAKAN 40, PHATTHANAKAN ROAD, KHWAENG PHATTHANAKAN, KHET SUAN LUANG, BANGKOK, 10250 THAILAND.
Location :	-
Ambient Temperature :	(23.0 ± 3) °C
Pressure :	(101.3 ± 3) kPa
Relative Humidity :	(50.0 ± 20) %
Received Date :	24 JANUARY 2023
Calibration Date :	25-26 JANUARY 2023
Date of Issue :	27 JANUARY 2023

[redacted]

Calibrated by : Nathakorn Pisutpaisan

Approved by : [redacted]

(Thanakul Petchurai)

This certificate is issued in accordance with the requirements of ISO/IEC 17025 standard, may not be reproduced other than in full, except with the prior written approval of the head of Calibration Laboratory.

Continuation of Calibration Certificate

Cert. No. : ACL23077
Job No. : VC66AC0031

Calibration Procedure : CP-AC-01

Calibration Method :

This equipment was calibrated by based on IEC-61672-3 (2013) Standard for sound level meter (SLM).

The SLM had tests to Acoustical and Electrical signal tests of frequency weighting with Anechoic chamber and Reference Standard Instruments.

For tests results of each items were made by observation of each Instruments display and also with SLM's display.

Condition of this result of calibration :

1. Reference Standard Instruments :

Instrument	Model	Serial No.	Cert. No.	Due Date
Waveform Generator	33210A	MY48017076	EF-0007-22	04-Feb-23
Waveform Generator	33511B	MY52302742	EF-0008-22	04-Feb-23
Digital Multimeter	33461A	MY53220104	EEL.BP. 04/0265	09-Feb-23
Digital Multimeter	33461A	MY53220076	EEL.BP. 03/0265	09-Feb-23
Digital Multimeter	34461A	MY60024273	EEL.BP. 05/0265	09-Feb-23
Programmable Attenuator	MAT-1070	62100114	EF-0009-22	07-Feb-23
Condenser Microphone	4180	2977900	AA-1013-22	24-Feb-23
Measuring Amplifier	NA-42KAI	34560495	AA-3005-22	22-Feb-23

2. This result of calibration was found accurate as shown on date and place of calibration for this calibrated item only.
3. This certificate is traceable to the international system of unit maintained at :
   3.1 National Institute of Metrology (Thailand).
   3.2 Thailand Institute of Scientific and Technological Research (TISTR).

[redacted]

Summary of Measurement Result :

Parameter	Pass	Fail	Uncertainty (dB)	Maximum-permitted uncertainty of measurement (dB)
1. Absolute sensitivity	✓	-	0.2	N/A
2. Self-generated noise	✓	-	0.2	N/A
3. Acoustical signal tests of frequency weightings				
125 Hz	✓	-	0.3	0.6
1000 Hz	✓	-	0.3	0.6
8000 Hz	✓	-	0.3	0.7
4. Electrical signal tests of frequency weightings				
For 10 Hz to 4 kHz	✓	-	0.3	0.6
For > 4 kHz to 10 kHz	✓	-	0.3	0.7
For > 10 kHz to 20 kHz	-	-	-	1.0
5. Frequency and time weightings at 1 kHz	✓	-	0.2	0.2
6. Long - term stability	✓	-	0.1	0.1
7. Level linearity on the reference level range	✓	-	0.2	0.3
8. Level linearity including the level range control	✓	-	0.2	0.3
9. Tone burst response	✓	-	0.2	0.3
10. Peak C sound level	✓	-	0.2	0.35
11. Overload indication	✓	-	0.2	0.25
12. High level stability	✓	-	0.1	0.1

[redacted]

Result of calibration :

1. Absolute sensitivity

Reference Acoustic Signal (dB)	Measured Value (dB)	Deviation (dB)	Acceptance Limit (dB)
93.9 (93.95)	93.9	0.0	±0.3

2. Self-generated noise

2.1 Normal test

Measured Value (dB)
14.2

2.2 The microphone of the sound level meter was replaced by electrical signal input device.

Frequency Weighting	Measured value (dB)
A - weight	10.8
C - weight	17.1
Flat	22.8

3. Acoustical signal tests of frequency weightings

Meter free-field acoustic response at a level of 84 dB

Frequency (Hz)	Deviation from various frequency weighting response curve (dB)			
	Flat	C-weight	A-weight	Acceptance Limits
125	0.2	0.2	0.2	± 1.5
1000	0.0	0.0	0.0	± 1.0
8000	-1.0	-0.9	-0.8	±5.0

[redacted]

4. Electrical signal tests of frequency weightings

Weighting network response with relative to 1 kHz.

Frequency (Hz)	Deviation from various frequency weighting response curve (dB)			
	Flat	C-weight	A-weight	Acceptance Limits
63	0.0	0.0	0.0	±2.0
125	0.0	0.1	0.0	±1.5
250	0.0	0.0	0.0	±1.5
500	0.0	0.1	0.0	±1.5
1000	0.0	0.0	0.0	±1.0
2000	0.0	0.1	0.1	±2.0
4000	0.0	0.1	0.1	±3.0
8000	0.1	0.1	0.1	±5.0

5. Frequency and time weightings at 1 kHz

5.1 Frequency weightings at 1 kHz

Frequency Weighting	Measured Value (dB)	Deviated Value (dB)	Acceptance Limits (dB)
A - weight	94.0	0.0	-
C - weight	94.0	0.0	± 0.2
Flat	94.0	0.0	± 0.2

5.2 Time weighting at 1 kHz

Frequency Weighting	Measured Value (dB)	Deviated Value (dB)	Acceptance Limits (dB)
Fast	94.0	0.0	-
Slow	94.0	0.0	± 0.1
Leq	94.0	0.0	± 0.1

6. Long - term stability

Frequency Weighting	SLM Display at initial (dB)	SLM Display at final (dB)	Deviated Value (dB)	Acceptance Limits (dB)
A - weight	94.0	94.1	0.1	± 0.3

[redacted]

7. Level linearity on the reference level range

Anticipated Value (dB)	Measured Value (dB)	Deviated Value (dB)	Acceptance Limits (dB)
137.0	137.0	0.0	± 1.1
136.0	136.0	0.0	± 1.1
135.0	135.0	0.0	± 1.1
134.0	134.0	0.0	± 1.1
133.0	133.0	0.0	± 1.1
132.0	132.0	0.0	± 1.1
131.0	131.0	0.0	± 1.1
129.0	129.0	0.0	± 1.1
124.0	124.0	0.0	± 1.1
119.0	119.0	0.0	± 1.1
114.0	114.0	0.0	± 1.1
109.0	109.0	0.0	± 1.1
104.0	104.1	0.1	± 1.1
99.0	99.0	0.0	± 1.1
94.0	94.0	0.0	± 1.1
89.0	89.0	0.0	± 1.1
84.0	84.0	0.0	± 1.1
79.0	79.0	0.0	± 1.1
74.0	74.0	0.0	± 1.1
69.0	69.0	0.0	± 1.1
64.0	64.0	0.0	± 1.1
59.0	59.0	0.0	± 1.1
54.0	54.0	0.0	± 1.1
49.0	49.0	0.0	± 1.1
44.0	44.0	0.0	± 1.1
39.0	39.0	0.0	± 1.1
34.0	34.0	0.0	± 1.1
30.0	29.9	-0.1	± 1.1
29.0	29.0	0.0	± 1.1
28.0	27.9	-0.1	± 1.1
27.0	27.0	0.0	± 1.1
26.0	25.9	-0.1	± 1.1
25.0	24.9	-0.1	± 1.1

[redacted]

8. Level linearity including the level range control

Range	Anticipated Value (dB)	Measured Value (dB)	Deviated Value (dB)	Acceptance Limits (dB)
Auto	94.0	94.0	0.0	±1.1

9. Tone burst response

Time Weighting	Tone burst duration, Tb (ms)	Cycle	Anticipated Value (dB)	Measured Value (dB)	Deviated Value (dB)	Acceptance Limits (dB)
Fast	0.25	1	108.0	108.0	0.0	1.5 ; -5.0
	2	8	117.0	117.0	0.0	1.0 ; -2.5
	200	800	134.0	134.1	0.1	±1.0
Slow	2	8	108.0	108.0	0.0	1.5 ; -5.0
	200	800	127.6	127.6	0.0	±1.0
SEL	0.25	1	99.0	98.9	-0.1	1.5 ; -5.0
	2	8	108.0	108.0	0.0	1.0 ; -2.5
	200	800	128.0	128.0	0.0	±1.0

10. Peak C sound level

Number of cycle in test signal	Anticipated Value (dB)	Measured Value, Lcpeak (dB)	Deviated Value (dB)	Acceptance Limits (dB)
Continuous	133.0	133.0	0.0	-
One	136.4	136.4	0.0	±3.0

Number of cycle in test signal	Anticipated Value (dB)	Measured Value (dB)	Deviated Value (dB)	Acceptance Limits (dB)
Continuous	133.0	132.9	-0.1	-
Positive half cycle	135.4	135.1	-0.3	±2.0
Negative half cycle	135.4	135.1	-0.3	±2.0

[redacted]

11. Overload indication

Measured value (dB)		Deviated Value (dB)	Acceptance Limits (dB)
Positive one-half cycle	Negative one-half cycle		
89.5	89.7	0.2	±1.5

12. High level stability

Frequency Weighting	SLM Display at initial (dB)	SLM Display at final (dB)	Deviated Value (dB)	Acceptance Limits (dB)
A - weight	137.0	137.0	0.0	±0.3

The reported uncertainty is based on a standard uncertainty multiplied by coverage factor $k = 2$ or any value following calculation,providing a lavel of confidence of approximately 95 %

End of Calibration Certificate

[redacted]

SITHIPORN ASSOCIATES CO.,LTD.
CALIBRATION LABORATORY

451-451/1 Sirinthorn Rd.,Bangbumru, Bangplud Bangkok 10700 THAILAND.
Tel.0-2435-8800 Fax.0-2433-1679 e-mail:cal-center@sithiphorn.com http://www.sithiphorn.com

NSC-TISI-TIS 17025
CALIBRATION 0394

Calibration Certificate

Equipment :	SOUND LEVEL METER
Manufacturer :	RION
Model :	NL-42/ Microphone UC-52 / Preamplifier NH-24
Serial No.:	00472130 / 169816 / 72464
ID No.:	RYG_FS0303

Condition As Found : GOOD

Customer : ALS LABORATORY GROUP (THAILAND) CO., LTD.
104 PHATTHANAKAN 40, PHATTHANAKAN ROAD,
KHWAENG PHATTHANAKAN, KHET SUAN LUANG,
BANGKOK, 10250 THAILAND.

Location :	-	
Ambient Temperature :	(23.0 ± 3)	°C
Pressure :	(101.3 ± 3)	kPa
Relative Humidity :	(50.0 ± 20)	%

REVIEW BY ...
APPROVED BY
NEXT CAL. DA[redacted]

Received Date :	13 JULY 2023
Calibration Date :	10 AUGUST 2023
Date of Issue :	11 AUGUST 2023

Calibrated by : Nathakorn Pisutpaisan

Approved by : [redacted]

(Thanakul Petchurai)

This certificate is issued in accordance with the requirements of ISO/IEC 17025 standard, may not be reproduced other than in full, except with the prior written approval of the head of Calibration Laboratory.

Continuation of Calibration Certificate

Calibration Procedure : CP-AC-01

Calibration Method :

This equipment was calibrated by based on IEC-61672-3 (2013) Standard for sound level meter (SLM).

The SLM had tests to Acoustical and Electrical signal tests of frequency weighting with Anechoic chamber and Reference Standard Instruments.

For tests results of each items were made by observation of each Instruments display and also with SLM's display.

Condition of this result of calibration :

1. Reference Standard Instruments :

Instrument	Model	Serial No.	Cert. No.	Due Date
Waveform Generator	33210A	MY48017076	EF-0009-23	07-FEB-24
Waveform Generator	33511B	MY52302742	EF-0010-23	07-FEB-24
Digital Multimeter	33461A	MY53220104	EEL.BP 30/0266	13-FEB-24
Digital Multimeter	33461A	MY53220076	EEL.BP 29/0266	13-FEB-24
Digital Multimeter	34461A	MY60024273	EEL.BP 31/0266	14-FEB-24
Programmable Attenuator	MAT-1070	62100114	EF-0011-23	08-FEB-24
Condenser Microphone	4180	2977900	AA-1001-23	14-FEB-24
Measuring Amplifier	NA-42KAI	34560495	AA-3002-23	14-FEB-24

2. This result of calibration was found accurate as shown on date and place of calibration for this calibrated item only.
3. This certificate is traceable to the international system of unit maintained at :
   3.1 National Institute of Metrology (Thailand).
   3.2 Thailand Institute of Scientific and Technological Research (TISTR).

[redacted]

Summary of Measurement Result :

Parameter	Pass	Fail	Uncertainty (dB)	Maximum-permitted uncertainty of measurement (dB)
1. Absolute sensitivity	✓	-	0.2	N/A
2. Self-generated noise	✓	-	0.2	N/A
3. Acoustical signal tests of frequency weightings				
125 Hz	✓	-	0.3	0.6
1000 Hz	✓	-	0.3	0.6
8000 Hz	✓	-	0.3	0.7
4. Electrical signal tests of frequency weightings				
For 10 Hz to 4 kHz	✓	-	0.3	0.6
For > 4 kHz to 10 kHz	✓	-	0.3	0.7
For > 10 kHz to 20 kHz	-	-	-	1.0
5. Frequency and time weightings at 1 kHz	✓	-	0.2	0.2
6. Long - term stability	✓	-	0.1	0.1
7. Level linearity on the reference level range	✓	-	0.2	0.3
8. Level linearity including the level range control	✓	-	0.2	0.3
9. Tone burst response	✓	-	0.2	0.3
10. Peak C sound level	✓	-	0.2	0.35
11. Overload indication	✓	-	0.2	0.25
12. High level stability	✓	-	0.1	0.1

Note : Pass/Fail evaluation for each parameter,
will be considered together from the acceptance limit and the Maximum-permitted uncertainty of measurement.

[redacted]

Result of calibration :

1. Absolute sensitivity

Reference Acoustic Signal (dB)	Measured Value (dB)	Deviation (dB)	Acceptance Limit (dB)
93.9 (93.98)	93.9	0.0	±0.3

2. Self-generated noise

2.1 Normal test

Measured Value (dB)
14.4

2.2 The microphone of the sound level meter was replaced by electrical signal input device.

Frequency Weighting	Measured value (dB)
A - weight	12.0
C - weight	17.8
Flat	23.2

3. Acoustical signal tests of frequency weightings

Meter free-field acoustic response at a level of 84 dB

Frequency (Hz)	Deviation from various frequency weighting response curve (dB)			
	Flat	C-weight	A-weight	Acceptance Limits
125	0.7	0.7	0.7	± 1.5
1000	-0.1	0.0	0.0	± 1.0
8000	-4.1	-4.0	-4.1	±5.0

[redacted]

4. Electrical signal tests of frequency weightings

Weighting network response with relative to 1 kHz.

Frequency (Hz)	Deviation from various frequency weighting response curve (dB)			
	Flat	C-weight	A-weight	Acceptance Limits
63	-0.1	0.0	0.0	±2.0
125	0.0	0.0	0.0	±1.5
250	0.0	0.0	0.0	±1.5
500	0.0	0.0	0.0	±1.5
1000	0.0	0.0	0.0	±1.0
2000	0.0	0.0	0.0	±2.0
4000	0.0	0.0	0.0	±3.0
8000	0.0	0.1	0.1	±5.0

5. Frequency and time weightings at 1 kHz

5.1 Frequency weightings at 1 kHz

Frequency Weighting	Anticipated Value (dB)	Measured Value (dB)	Deviated Value (dB)	Acceptance Limits (dB)
A - weight	94.0	94.0	0.0	± 0.2
C - weight	94.0	94.0	0.0	± 0.2
Flat	94.0	94.0	0.0	± 0.2

5.2 Time weighting at 1 kHz

Frequency Weighting	Anticipated Value (dB)	Measured Value (dB)	Deviated Value (dB)	Acceptance Limits (dB)
Fast	94.0	94.0	0.0	± 0.1
Slow	94.0	94.0	0.0	± 0.1
Leq	94.0	94.0	0.0	± 0.1

6. Long - term stability

Frequency Weighting	SLM Display at initial (dB)	SLM Display at final (dB)	Deviated Value (dB)	Acceptance Limits (dB)
A - weight	94.0	94.0	0.0	± 0.3

[redacted]

7. Level linearity on the reference level range

Anticipated Value (dB)	Measured Value (dB)	Deviated Value (dB)	Acceptance Limits (dB)
137.0	137.0	0.0	± 1.1
136.0	136.0	0.0	± 1.1
135.0	135.0	0.0	± 1.1
134.0	134.0	0.0	± 1.1
133.0	133.0	0.0	± 1.1
132.0	132.0	0.0	± 1.1
131.0	131.0	0.0	± 1.1
129.0	129.0	0.0	± 1.1
124.0	124.0	0.0	± 1.1
119.0	119.0	0.0	± 1.1
114.0	114.0	0.0	± 1.1
109.0	109.0	0.0	± 1.1
104.0	104.0	0.0	± 1.1
99.0	99.0	0.0	± 1.1
94.0	94.0	0.0	± 1.1
89.0	89.0	0.0	± 1.1
84.0	84.0	0.0	± 1.1
79.0	79.0	0.0	± 1.1
74.0	74.0	0.0	± 1.1
69.0	69.0	0.0	± 1.1
64.0	63.9	-0.1	± 1.1
59.0	59.0	0.0	± 1.1
54.0	53.9	-0.1	± 1.1
49.0	49.0	0.0	± 1.1
44.0	44.0	0.0	± 1.1
39.0	38.9	-0.1	± 1.1
34.0	34.0	0.0	± 1.1
30.0	30.0	0.0	± 1.1
29.0	28.9	-0.1	± 1.1
28.0	28.0	0.0	± 1.1
27.0	27.0	0.0	± 1.1
26.0	26.0	0.0	± 1.1
25.0	25.0	0.0	± 1.1

[redacted]

8. Level linearity including the level range control

Range	Anticipated Value (dB)	Measured Value (dB)	Deviated Value (dB)	Acceptance Limits (dB)
Auto	94.0	94.0	0.0	±1.1

9. Tone burst response

Time Weighting	Tone burst duration, Tb (ms)	Cycle	Anticipated Value (dB)	Measured Value (dB)	Deviated Value (dB)	Acceptance Limits (dB)
Fast	0.25	1	108.0	107.9	-0.1	1.5 ; -5.0
	2	8	117.0	117.0	0.0	1.0 ; -2.5
	200	800	134.0	134.0	0.0	±1.0
Slow	2	8	108.0	108.0	0.0	1.5 ; -5.0
	200	800	127.6	127.6	0.0	±1.0
SEL	0.25	1	99.0	98.9	-0.1	1.5 ; -5.0
	2	8	108.0	108.0	0.0	1.0 ; -2.5
	200	800	128.0	128.1	0.1	±1.0

10. Peak C sound level

Number of cycle in test signal	Anticipated Value (dB)	Measured Value, Lcpeak (dB)	Deviated Value (dB)	Acceptance Limits (dB)
Continuous	133.0	133.0	0.0	±3.0
One	136.4	135.6	-0.8	±3.0

Number of cycle in test signal	Anticipated Value (dB)	Measured Value (dB)	Deviated Value (dB)	Acceptance Limits (dB)
Continuous	133.0	133.0	0.0	±2.0
Positive half cycle	135.4	135.2	-0.2	±2.0
Negative half cycle	135.4	135.2	-0.2	±2.0

[redacted]

11. Overload indication

Measured value (dB)		Deviated Value (dB)	Acceptance Limits (dB)
Positive one-half cycle	Negative one-half cycle		
89.7	89.7	0.0	±1.5

12. High level stability

Frequency Weighting	SLM Display at initial (dB)	SLM Display at final (dB)	Deviated Value (dB)	Acceptance Limits (dB)
A - weight	137.0	137.0	0.0	±0.3

The reported uncertainty is based on a standard uncertainty multiplied by coverage factor $k = 2$ or any value following calculation,providing a lavel of confidence of approximately 95 %

End of Calibration Certificate

[redacted]

DKSH

NSC-TISI-TIS 17025
Calibration 0087

Certificate of Calibration

Equipment:	SPECTROPHOTOMETER	Certificate No.:	C06230441
Model:	DR6000	Issued Date:	19 September 2023
Serial No. (or ID.):	1627845 (RYG_EN0037)	Job No.:	WO-00005382
Manufacturer:	HACH	Page:	1 of 3
Condition:	In Condition		

Customer: ALS Laboratory Group (Thailand) Co.,Ltd. (Rayong Branch)
616/10 Moo 5 T.Maenam Khu,
A.Pluakdaeng, Rayong 21140, Thailand.

REVIEW BY [redacted]
APPROVED
NEXT CAL. DATE 18/3/25

Environment Condition:						
Temperature	23.9	°C	±	0.2	°C
Humidity	65.3	%RH	±	1.4	%RH

Calibration Place: ALS Laboratory Group (Thailand) Co.,Ltd. (Rayong Branch) (Wet Chemistry)
616/10 Moo 5 T.Maenam Khu,
A.Pluakdaeng, Rayong 21140, Thailand.

Calibration By: Mr.Nattapat Rungrueang

Calibration Date: 18 September 2023

The Method used: In house method, CAL-WI-24, base on ASTM E 275-08 and ASTM E 387-04

Traceability: This certificate is traceable to the CRM maintained by National Institute of Standards and Technology (NIST) through Starna Scientific Limited.

The standard for Wavelength Certificate No. 111583 and 111584
The standard for Photometric Certificate No. 9114984 and 111588
The standard for Stray light Certificate No. 111586 and 111585
The standard for Spectral resolution Certificate No. 111587

[redacted]

(Mr. Nattapat Rungrueang)
Person in charge

(Mr. Nitinun Srihawan)
Authorized signatory

This certificate is issued the units of measurement according to the International System of Units (SI). It provides traceability of measurement to international or national standard or other recognized national standard laboratories.

The measurement uncertainty stated is the expanded uncertainty which is obtained from the standard uncertainty multiplied by the coverage factor (k=2) to provide a level of confidence of approximately 95%. It is determined in accordance with the Guide to Expression of Uncertainty in Measurement (GUM).

These results may be affected by deviations from specified conditions. The results relate only to the items tested, calibrated or sampled. The report shall not be reproduced except in full without approval of DKSH Technology Limited.

บริษัท ดีเคเอสเอช เทคโนโลยี จำกัด
DKSH Technology Limited
2533 ถนนสุขุมวิท แขวงบางจาก เขตพระโขนง กรุงเทพมหานคร 10260
2533 Sukhumvit Road, Bangchak, Phrakhanong, Bangkok 10260
Phone: +66 2639 7000 Email: info.calibration@dksh.com Website: www.dksh.com/scientific-thailand

Calibration Results:

Without Adjustment

Wavelength Accuracy (nm), The spectral bandwidth of Std at 2 nm and UUC at 2 nm

Standard Wavelength	Unit Under Calibration	Correction	Uncertainty
418.61	418.3	0.31	0.13
536.66	536.6	0.06	0.13
637.98	638.3	-0.32	0.13
748.48	748.7	-0.22	0.13
807.03	807.4	-0.37	0.13

Photometric Accuracy (Absorbance)

Wavelength	Standard absorbance	Unit Under Calibration	Correction	Uncertainty
420 nm	0.0000	0.000	0.0000	0.0045
	0.2930	0.289	0.0040	0.0045
	0.5168	0.519	-0.0022	0.0045
	1.0298	1.029	0.0008	0.0045
440 nm	0.0000	0.000	0.0000	0.0045
	0.2867	0.283	0.0037	0.0045
	0.5073	0.509	-0.0017	0.0045
	1.0083	1.007	0.0013	0.0045
465 nm	0.0000	0.000	0.0000	0.0045
	0.2516	0.250	0.0016	0.0045
	0.4595	0.462	-0.0025	0.0045
	0.9334	0.933	0.0004	0.0045
546.1 nm	0.0000	0.000	0.0000	0.0045
	0.2461	0.245	0.0011	0.0045
	0.4652	0.466	-0.0008	0.0045
	0.9468	0.946	0.0008	0.0045
590 nm	0.0000	0.000	0.0000	0.0045
	0.2594	0.259	0.0004	0.0045
	0.5040	0.505	-0.0010	0.0045
	1.0032	1.002	0.0012	0.0045
635 nm	0.0000	0.000	0.0000	0.0045
	0.2579	0.257	0.0009	0.0045
	0.4971	0.497	0.0001	0.0045
	0.9720	0.971	0.0010	0.0045

Calibration Results:

Without Adjustment

Photometric Accuracy (Absorbance)

Wavelength	Standard absorbance	Unit Under Calibration	Correction	Uncertainty
235 nm	0.0000	0.000	0.0000	0.0080
	0.7355	0.737	-0.0015	0.0080
257 nm	0.0000	0.000	0.0000	0.0080
	0.8574	0.857	0.0004	0.0080
313 nm	0.0000	0.000	0.0000	0.0080
	0.2864	0.290	-0.0036	0.0080
350 nm	0.0000	0.000	0.0000	0.0080
	0.6374	0.637	0.0004	0.0080

Stray light *

Standard: cut-off	UUC: Wavelength (nm)	UUC: Transmission (%T)	Absorbance (A)
260.62 +/- 0.11 nm	260.6	1.3	1.886
391.44 +/- 0.11 nm	391.4	1.3	1.886

Spectral Resolution *

Nominal Concentration 0.02 % v/v	Peak	Trough	Ratio	SBW
Standard Wavelength (nm)	268.66	266.69	1.38	2.00
UUC: Wavelength (nm)	268.2	266.1		
Std Absorbance (A)	0.4566	0.2780		
Absorbance (A)	0.413	0.300		

* Calibration Marked " Not TISI Accredited " in this Certificate have been included for completeness.

The End of Certificate

บริษัท ดีเคเอสเอช เทคโนโลยี จำกัด
DKSH Technology Limited
2533 ถนนสุขุมวิท แขวงบางจาก เขตพระโขนง กรุงเทพมหานคร 10260
2533 Sukhumvit Road, Bangchak, Phrakhanong, Bangkok 10260
Phone: +66 2639 7000 Email: info.calibration@dksh.com Website: www.dksh.com/scientific-thailand

ใบตรวจสอบสภาพเครื่องวัดสิ่งแวดล้อม

เลขที่ใบงาน: WO-00005382

ชนิดเครื่องมือ: SPECTROPHOTOMETER รุ่น: DR6000 หมายเลขเครื่อง: 1627845

ตรวจสอบ (รับ) 18 Sep 2023		รายการตรวจเช็ค	ตรวจสอบ (ส่ง) 18 Sep 2023		หมายเหตุ
ปกติ	ไม่ปกติ		ปกติ	ไม่ปกติ	
		General			
☑	☐	1. ความสมบูรณ์เครื่อง	☑	☐	
☑	☐	2. ความสะอาด (ช่องใส่ตัวอย่าง, ภายใน-นอกเครื่อง)	☑	☐	
☑	☐	3. สวิทช์ ปิด – เปิด เครื่อง (On-Off Swicth)	☑	☐	
☑	☐	4. ปุ่มกด (Keypad)	☑	☐	
☑	☐	5. หน้าจอ (Display, Screen Contrast)	☑	☐	
		Spectrophotometer			
☐	☐	6. แรงดันไฟฟ้า (Battery Backup) >= 2.5 VDC	☐	☐	
☐	☐	7. ตัวหมุนเลือกความยาวคลื่น (Wavelength Control)	☐	☐	
☑	☐	8. ความยาวคลื่น (Wavelength Check)	☑	☐	*
☑	☐	9. แหล่งกำเนิดแสง (UV < 3,000 hour)	☑	☐	9.2 Hours
☑	☐	10. แหล่งกำเนิดแสง (Visible < 5,000 hour)	☑	☐	741.5 Hours
☑	☐	11. ช่องวัดหลายตัวอย่าง (Carousel Module)	☑	☐	
		pH Meter and Conductivity Meter			
☐	☐	12. อิเล็คโทรด (Electrode and Connection Cable)	☐	☐	
☐	☐	13. ระดับสารละลายใน Electrode (Level KCl)	☐	☐	
☐	☐	14. ฝาปิดกันปลาย Electrode (Dust Protection Hood)	☐	☐	
☐	☐	15. ขาจับอิเล็คโทรด (Stand)	☐	☐	
		Turbidimeter			
☐	☐	16. ค่าความขุ่นที่ต่ำสุด (No Sample)	☐	☐	
☐	☐	17. ระดับการส่องสว่างของแสง (>= 2.5 ไม่เกิน 3.0)	☐	☐	
		Automatic titrator			
☐	☐	18. สภาพ Piston Burettes	☐	☐	
☐	☐	19. Function Rinsing and Dosing	☐	☐	
☐	☐	20. ระบบท่อสายยางและอุปกรณ์ประกอบ	☐	☐	

เพิ่มเติม/ข้อแนะนำ : *656.1nm=656.1nm

*486.0nm=485.5nm

Mr.Nattapat Rungrueang

Service Engineer

บริษัท ดีเคเอสเอช เทคโนโลยี จำกัด
DKSH Technology Limited
2533 ถนนสุขุมวิท แขวงบางจาก เขตพระโขนง กรุงเทพมหานคร 10260
2533 Sukhumvit Road, Bangchak, Phrakhanong, Bangkok 10260
Phone: +66 2639 7000 Email: info.calibration@dksh.com Website: www.dksh.com/scientific-thailand

TECHNOLOGY PROMOTION ASSOCIATION (THAILAND-JAPAN)
CORPORATE SERVICES 3: EQUIPMENT CALIBRATION AND TESTING SERVICES
534/4 PATTANAKARN ROAD SOI 18, SUANLUANG, SUANLUANG BANGKOK 10250
TEL. 0-2717-3000-29 FAX. 0-2719-9484

NSC-TISI-TIS17025
CALIBRATION 0008

Certificate of Calibration

Equipment :	pH Meter
Manufacturer :	Mettler Toledo
Model :	SevenCompact S220
Serial No. :	C104059460
ID No. :	RYG_EN0183
Condition As-Received:	Used Item
Received Date :	24 February 2023
Calibration Date :	27 February 2023
Reference :	2302-0886DSC-2
Submitted by :	ALS Laboratory Group (Thailand) Co.,Ltd. (Rayong Branch) 616/10 Moo 5, T.Maenam Khu, A.Pluakdaeng, Rayong 21140, Thailand
Ambient Temperature :	(25 ± 2.5) °C
Relative Humidity :	(50 ± 15) %
Calibration Procedure :	In - house method : - CP-CH5 by direct measurement with standard voltage calibrator and direct measurement with certified reference material (CRM) - CP-CH8 by comparison with standard thermometer

REVIEW BY [redacted]
APPROVED
NEXT CAL.

Calibrated by : [redacted]

Approved by :

Approved Signatory

( ) Malee Butkruea
(✓) Saithip Meangmai
( ) Warakorn Lerngagtrakul

Issue Date : 28 February 2023

The Uncertainties are for a confidence probability of approximately 95%

This certificate may not be reproduced other than in full, except with the prior written
Approval of the head of Corporate Services 3 : Equipment Calibration and Testing Services.

Condition of this calibration result

1. Reference Standard Instrument : -

Instrument	Serial No.	ID No.	Cert. No.	Due Date
1) Document Process Calibrator	54030049	130RC116	22E2769	24 Aug 2023
2) Ref. Standard Thermometer	4982054	110RC044	22I1306	27 Oct 2023

This certification is traceable to the International System of Unit maintained at:-

- Traceable to National Institute of Metrology (Thailand), NIMT

2. Certified Reference Materials : The measurement results are traceable to SI through CPA chem Ltd., ANSI-ASQ National Accreditation Board, Accredited No. AR-1835

Buffer Solution	Manufacturer	Lot No.	Exp. date
pH 4.008	CPA chem	826588	09 July 2024
pH 6.987	CPA chem	826589	09 July 2023
pH 10.010	CPA chem	863835	28 Dec 2023

3. This certificate is valid only to the item calibrated on date and place of calibration.

Calibration Results

Function : mV Measurement

Performing standard curve by Fluke at pH (4,7,10)

Unit Under Calibration	Nominal Value	Standard Voltage Input	Actual Reading		Uncertainty of Measurement (±mV)	Coverage factor *k*
	pH	mV	mV	pH		
pH Meter	4.000	177.48	177.4	4.000	0.058	2.00
S/N.: C104059460	7.000	0.00	-0.1	7.000	0.058	2.00
	10.000	-177.48	-177.5	10.000	0.058	2.00

[redacted]

Calibration Results

Function : pH Measurement

Performing three buffers standard curve by using buffer nominal pH (4,7,10)

Unit Under Calibration	Standard pH Buffer Solution	Actual pH Reading	Actual mV Reading (mV)	Uncertainty of pH measurement (±)	Coverage factor *k*
pH Electrode	4.008	4.008	179.1	0.0046	2.00
S/N.: 1453404	6.987	6.988	4.7	0.0084	2.00
	10.010	10.013	-172.4	0.0069	2.00

Function : Temperature Measurement

(*) Without adjustment

This equipment was connected with Temperature Probe;

- Model : InLabExpert Pro-ISM
- Serial No. : 1453404

Dimension of probe;

- Length : 120 mm.
- Diameter : 12 mm.
- Immersion Depth : 100 mm.

Calibration Point (°C)	Standard Temperature (°C)	UUC* Reading (°C)	Error (°C)	Uncertainty of measurement (± °C)	Coverage factor *k*
25.0	25.001	24.8	-0.201	0.13	2.00

Remark : - UUC* = Unit Under Calibration

The reported uncertainty of measurement was based on a standard uncertainty multiplied by a coverage factor *k* , providing a level of confidence of approximately 95 %.

-o0o-

[redacted]

TECHNOLOGY PROMOTION ASSOCIATION (THAILAND-JAPAN)
CORPORATE SERVICES 3: EQUIPMENT CALIBRATION AND TESTING SERVICES
534/4 PATTANAKARN ROAD SOI 18, SUANLUANG, SUANLUANG, BANGKOK 10250
TEL. 0-2717-3000-24 FAX. 0-2719-9484

NSC-TISI-TIS17025
CALIBRATION 0008

Certificate of Calibration

Certificate No. : 23E753
Page : 1 of 2

Equipment :	pH Meter
Manufacturer:	Mettler Toledo
Model :	SevenCompact S220
Serial No.:	C104059460
ID No.:	RYG_EN0183
Condition As-Received:	Used Item
Received Date:	24 February 2023
Calibration Date:	28 February 2023

This certificate may not be reproduced other than in full, except with the prior written approval of the head of Corporate Services 3: Equipment Calibration and Testing Services.

Reference:	2302-0886DSC
Ambient Temperature:	(23 ± 2) °C
Relative Humidity:	(50 ± 10) %

Submitted by: ALS Laboratory Group (Thailand) Co.,Ltd. (Rayong Branch)
616/10 Moo 5, T.Maenam Khu, A.Pluakdaeng,
Rayong 21140, Thailand

Procedure used: Calibration were conducted using In-house calibration Procedure CP-E17 According to direct measurement method with Multi-Product Calibrator.

Condition of this result of calibration

1.Reference standards instuments :

Instrument	Model	Serial No.	Certificate No.	Due Date
1) Multi-Product Calibrator	5500A	6440007	22E1670	18 May 2023

2.This result of calibration was made on requested at the point specified by customer.

3.The certificate is valid only to the item calibrated on date and place of calibration.

4.This Certification is traceable to the International System of Unit maintained at:-

-National Institute of Metrology Thailand (NIMT)

Calibrated by : Wutchareeporn Wongchutikrane
Issue Date : 02 March 2023

Approved Signatory : [redacted]

[ ] Phalinee Prabpalpal
[✓] Nuntawat Khamchai
[ ] Pornthippa Tameyakul

B 0309672

Result of calibration :- (*) Without adjustment ( ) After adjustment

Function: DC voltage measuremer **Range:** 2000 mV

Standard Value (mV)	UUC* Reading (mV)	Error (mV)	Uncertainty (± μV)
-200.0000	-200.0	0.0	72
-150.0000	-150.0	0.0	69
-100.0000	-100.0	0.0	65
-50.0000	-50.0	0.0	62
0.0000	0.0	0.0	58
50.0000	50.0	0.0	62
100.0000	99.9	-0.1	65
150.0000	149.9	-0.1	69
200.0000	199.9	-0.1	72

The reported uncertainty of measurement was based on a standard uncertainty multiplied by a coverage factor *k*=2, providing a level of confidence of approximately 95 %

UUC* = Unit Under Calibration.

-o0o-

[redacted]

a 1150477

DKSH

NSC-TISI-TIS 17025
Calibration 0087

Certificate of Calibration

Equipment:	SPECTROPHOTOMETER	Certificate No.:	C06230442
Model:	DR3900	Issued Date:	22 September 2023
Serial No. (or ID.):	2021761 (RYG_EN0179)	Job No.:	WO-00005382
Manufacturer:	HACH	Page:	1 of 3
Condition:	In Condition		

Customer: ALS Laboratory Group (Thailand) Co.,Ltd. (Rayong Branch)
616/10 Moo 5 T.Maenam Khu,
A.Pluakdaeng, Rayong 21140, Thailand.

REVIEW BY [redacted]
APPROVED [redacted]
NEXT CAL. DATE .....

Environment Condition:						
Temperature	24.1	°C	±	0.1	°C
Humidity	61.6	%RH	±	1.8	%RH

Calibration Place: ALS Laboratory Group (Thailand) Co.,Ltd. (Rayong Branch) (Wet Chemistry)
616/10 Moo 5 T.Maenam Khu,
A.Pluakdaeng, Rayong 21140, Thailand.

Calibration By: Mr.Nattapat Rungrueang

Calibration Date: 18 September 2023

The Method used: In house method, CAL-WI-24, base on ASTM E 275-08 and ASTM E 387-04

Traceability: This certificate is traceable to the CRM maintained by National Institute of Standards and Technology (NIST) through Starna Scientific Limited.

The standard for Wavelength Certificate No. 111583 and 111584
The standard for Photometric Certificate No. 9114984
The standard for Stray light Certificate No. 111585

[redacted]
(Mr. Nattapat Rungrueang)
Person in charge

[redacted]
(Mr. Nitinun Srihawan)
Authorized signatory

This certificate is issued the units of measurement according to the International System of Units (SI). It provides traceability of measurement to international or national standard or other recognized national standard laboratories.

The measurement uncertainty stated is the expanded uncertainty which is obtained from the standard uncertainty multiplied by the coverage factor (k=2) to provide a level of confidence of approximately 95%. It is determined in accordance with the Guide to Expression of Uncertainty in Measurement (GUM).

These results may be affected by deviations from specified conditions. The results relate only to the items tested, calibrated or sampled. The report shall not be reproduced except in full without approval of DKSH Technology Limited.

บริษัท ดีเคเอสเอช เทคโนโลยี จำกัด
DKSH Technology Limited
2533 ถนนสุขุมวิท แขวงบางจาก เขตพระโขนง กรุงเทพมหานคร 10260
2533 Sukhumvit Road, Bangchak, Phrakhanong, Bangkok 10260
Phone: +66 2639 7000 Email: info.calibration@dksh.com Website: www.dksh.com/scientific-thailand

Calibration Results:

Without Adjustment

Wavelength Accuracy (nm), The spectral bandwidth of Std at 5 nm and UUC at 5 nm

Standard Wavelength	Unit Under Calibration	Correction	Uncertainty
418.40	418	0.40	0.59
537.00	536	1.00	0.59
638.00	638	0.00	0.59
747.61	748	-0.39	0.59
807.04	807	0.04	0.59

Photometric Accuracy (Absorbance)

Wavelength	Standard absorbance	Unit Under Calibration	Correction	Uncertainty
420 nm	0.0000	0.000	0.0000	0.0045
	0.2930	0.289	0.0040	0.0045
	0.5168	0.517	-0.0002	0.0045
	1.0298	1.026	0.0038	0.0045
440 nm	0.0000	0.000	0.0000	0.0045
	0.2867	0.281	0.0057	0.0045
	0.5073	0.506	0.0013	0.0045
	1.0083	1.003	0.0053	0.0045
465 nm	0.0000	0.000	0.0000	0.0045
	0.2516	0.249	0.0026	0.0045
	0.4595	0.461	-0.0015	0.0045
	0.9334	0.933	0.0004	0.0045
546.1 nm	0.0000	0.000	0.0000	0.0045
	0.2461	0.244	0.0021	0.0045
	0.4652	0.466	-0.0008	0.0045
	0.9468	0.945	0.0018	0.0045
590 nm	0.0000	0.000	0.0000	0.0045
	0.2594	0.257	0.0024	0.0045
	0.5040	0.504	0.0000	0.0045
	1.0032	1.000	0.0032	0.0045
635 nm	0.0000	0.000	0.0000	0.0045
	0.2579	0.256	0.0019	0.0045
	0.4971	0.497	0.0001	0.0045
	0.9720	0.970	0.0020	0.0045

Calibration Results:

Without Adjustment

Stray light *

Standard: cut-off	UUC: Wavelength (nm)	UUC: Transmission (%T)	Absorbance (A)
391.44 +/- 0.11 nm	391	3.6	1.444

* Calibration Marked " Not TISI Accredited " in this Certificate have been included for completeness.

The End of Certificate

บริษัท ดีเคเอสเอช เทคโนโลยี จำกัด
DKSH Technology Limited
2533 ถนนสุขุมวิท แขวงบางจาก เขตพระโขนง กรุงเทพมหานคร 10260
2533 Sukhumvit Road, Bangchak, Phrakhanong, Bangkok 10260
Phone: +66 2639 7000 Email: info.calibration@dksh.com Website: www.dksh.com/scientific-thailand

ใบตรวจสอบสภาพเครื่องวัดสิ่งแวดล้อม

เลขที่ใบงาน: WO-00005382

ชนิดเครื่องมือ: SPECTROPHOTOMETER รุ่น: DR3900 หมายเลขเครื่อง: 2021761

ตรวจสอบ (รับ) 18 Sep 2023		รายการตรวจเช็ค	ตรวจสอบ (ส่ง) 18 Sep 2023		หมายเหตุ
ปกติ	ไม่ปกติ		ปกติ	ไม่ปกติ	
		General			
☑	☐	1. ความสมบูรณ์เครื่อง	☑	☐	
☑	☐	2. ความสะอาด (ช่องใส่ตัวอย่าง, ภายใน-นอกเครื่อง)	☑	☐	
☑	☐	3. สวิทช์ ปิด – เปิด เครื่อง (On-Off Swicth)	☑	☐	
☑	☐	4. ปุ่มกด (Keypad)	☑	☐	
☑	☐	5. หน้าจอ (Display, Screen Contrast)	☑	☐	
		Spectrophotometer			
☐	☐	6. แรงดันไฟฟ้า (Battery Backup) >= 2.5 VDC	☐	☐	
☐	☐	7. ตัวหมุนเลือกความยาวคลื่น (Wavelength Control)	☐	☐	
☑	☐	8. ความยาวคลื่น (Wavelength Check)	☑	☐	807nm=807.3nm
☐	☐	9. แหล่งกำเนิดแสง (UV < 3,000 hour)	☐	☐	
☑	☐	10. แหล่งกำเนิดแสง (Visible < 5,000 hour)	☑	☐	
☐	☐	11. ช่องวัดหลายตัวอย่าง (Carousel Module)	☐	☐	
		pH Meter and Conductivity Meter			
☐	☐	12. อิเล็คโทรด (Electrode and Connection Cable)	☐	☐	
☐	☐	13. ระดับสารละลายใน Electrode (Level KCl)	☐	☐	
☐	☐	14. ฝาปิดกันปลาย Electrode (Dust Protection Hood)	☐	☐	
☐	☐	15. ขาจับอิเล็คโทรด (Stand)	☐	☐	
		Turbidimeter			
☐	☐	16. ค่าความขุ่นที่ต่ำสุด (No Sample)	☐	☐	
☐	☐	17. ระดับการส่องสว่างของแสง (>= 2.5 ไม่เกิน 3.0)	☐	☐	
		Automatic titrator			
☐	☐	18. สภาพ Piston Burettes	☐	☐	
☐	☐	19. Function Rinsing and Dosing	☐	☐	
☐	☐	20. ระบบท่อสายยางและอุปกรณ์ประกอบ	☐	☐	

เพิ่มเติม/ข้อแนะนำ :

Mr.Nattapat Rungrueang

Service Engineer

บริษัท ดีเคเอสเอช เทคโนโลยี จำกัด
DKSH Technology Limited
2533 ถนนสุขุมวิท แขวงบางจาก เขตพระโขนง กรุงเทพมหานคร 10260
2533 Sukhumvit Road, Bangchak, Phrakhanong, Bangkok 10260
Phone: +66 2639 7000 Email: info.calibration@dksh.com Website: www.dksh.com/scientific-thailand

Metrological Center

SCI ECO Services Company Limited

33/2 Moo 3, T.Banpa, A.Kaengkhoi, Saraburi 18110, Thailand.

Saraburi Tel : +66 3627 3096 Fax : +66 3627 3100

Bangkok Tel : +668 9205 6851 , +669 8247 2360

Website : www.scieco.co.th E-Mail : calibrate@scg.com

NSC-TISI-TIS 17025
CALIBRATION 0244

Certificate No. T230117I01 "Substitute for Calibration Certificate Number T230117"

Certificate of Calibration

Equipment	:	Chamber (Cooling Room)
Manufacturer	:	MODULAR
Model	:	IREVCOHCOO
Serial No.	:	C00332176
Customer Code	:	RYG_EN0185
ID No.	:	T1938A5
Customer	:	ALS Laboratory Group (Thailand) Co.,Ltd. (Rayong Branch) 616/10 Moo 5 T.Maenam Khu, A.Pluakdaeng, Rayong 21140
Customer Location	:	Laboratory
Date of Receipt	:	23 January 2023
Calibrated By	:	[redacted] Technician)
Approved By		[redacted]onchai Suriyawong (Site Calibration Manager)
Date of Issue	:	[redacted]

REVIEW BY [redacted]
APPROVED [redacted]
NEXT CAL. D[redacted]

The uncertainties are for a confidence probability of approximately 95%.

This Certificate is issued in accordance with the conditions of accreditation granted by the Thai Laboratory Accreditation Scheme which has assessed the measurement capability of the laboratory and its traceability to recognized national standards and to the units of measurement realized at the corresponding national standard laboratory. This certificate may not be reproduced other than in full except with the prior written approval of the Metrological Center.

Certificate No. T230117I01

Calibration Report

Equipment : **Chamber (Cooling Room)**
Date of Calibration : **25 January 2023**
Environment : **Temperature : 23.4-24.9 °C**
Line Voltage : 221.4-230.2 V
Relative Humidity : 55 - 65 %RH

Condition of this results of calibration :

1. Thisequipment was calibrated by insert 16 standard thermocouples type T into its chamber , the other one standard thermocouples type T use for ambient temperature measurement . The calibration was done in according to WI-T20 (based on ASTM E145-94 (Reapproved 2001) and AS2853-1986).
   All data show below were final values and the initial data from customer request . The temperature scale used was based on ITS - 90 .
2. Reference Standard Instrument :

Instrument	Model	Instrument No.	Certificate No.	Due Date
TC	TYPE T	TN141-TN150	T222123	5 October 2023
TC	TYPE T	TN151-TN160	T222123	5 October 2023
DATA LOGGER	34970A	T150	T222123	5 October 2023

3. This certificate is traceable to :
   National Institute of Metrology (Thailand) through Metrological Center (NSC-TISI-TIS 17025 CALIBRATION 0244.)
4. Condition of calibrated item : good
   Equipment Description :
   Time Constant 1 Hour - Minute At 3 °C
   Fresh Air Damper ☐ Open ☐ Min ☐ Medium ☐ Max
   ☐ Close
   ☒ Not Available
5. Adjustment :
   (X) without adjustment ( ) after adjustment

Approved By. [redacted]

Certificate No. T230117I01

Calibration Report

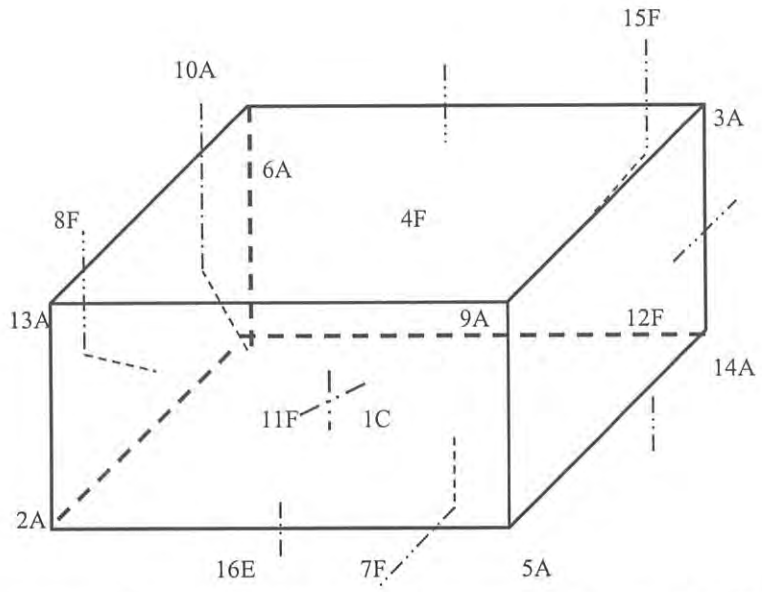

C = Centre , F = Centre of Face , A = Corner , E = Centre of Edge

1C	=	TN141
2A	=	TN142
3A	=	TN143
4F	=	TN144
5A	=	TN145
6A	=	TN146
7F	=	TN147
8F	=	TN148
9A	=	TN149
10A	=	TN150
11F	=	TN151

12F	=	TN152
13A	=	TN153
14A	=	TN154
15F	=	TN155
16E	=	TN156

Approved By. [redacted]

SCG

Metrological Center
SCI ECO Services Company Limited
33/2 Moo 3, T.Banpa, A.Kaengkhoi, Saraburi 18110, Thailand.

NSC-TISI-TIS 17025
CALIBRATION 0244

Certificate No.T230117I01

Calibration Report

Measurement Results

Calibration Point	Average Standard Reading at each position (°C)											
	TN141	TN142	TN143	TN144	TN145	TN146	TN147	TN148	TN149	TN150	TN151	TN152
3.0	2.88	3.02	3.23	3.06	3.15	3.23	3.14	3.18	3.16	3.31	3.08	3.33
	TN153	TN154	TN155	TN156								
	3.05	3.20	3.17	3.05								

Chamber (Cooling Room)			Temperature Distribution			
Setting (°C)	Reading (°C)		Stability (+°C)	Uniformity (°C)	Uncertainty (±°C)	Coverage Factor *k*
	Min , Max	Average				
3.0	2.8 , 4.1	3.5	1.20	1.40	2.00	2.07

The calibration result apply only the above calibrated item.

The result of test was found accurate as shown on date and place of test only.

The reported expanded uncertainty is based on a standard uncertainty multiplied by a coverage factor *k* which for a t-distribution, providing a level of confidence of approximately 95 % .

Approved By [redacted]

TECHNOLOGY PROMOTION ASSOCIATION (THAILAND-JAPAN)
CORPORATE SERVICES 3 : EQUIPMENT CALIBRATION AND TESTING SERVICES
534/4 PATTANAKARN ROAD SOI 18, SUANLUANG, SUANLUANG BANGKOK 10250
TEL. 0-2717-3000 FAX. 0-2719-9484

Certificate of Testing

Equipment :	DO Meter
Manufacturer :	YSI
Model :	5000-115V
Serial No. :	15E102796
ID No. :	RYG_EN0032
Received Date :	21 July 2023
Test Date :	24 July 2023
Reference :	2307-0713DSC-1
Submitted by :	ALS Laboratory Group (Thailand) Co.,Ltd. Rayong Branch 616/10 Moo 5, T.Maenam Khu, A.Pluakdaeng, Rayong 21140, Thailand
Laboratory Condition :	Temperature (25 ± 5) °C Humidity (50 ± 20) %
Test Procedure :	In - house method : CP-CH9 by Comparison Technique with Azide Modification Method
Tested by :	Walalak Sirithean [redacted]
Approved by :	[redacted] Approved Signatory

REVIEW BY [redacted]
APPROVED
NEXT CAL. DATE .....

( ) Malee Butkruea
(✓) Saithip Meangmai
( ) Warakorn Lerngagtrakul

Issue Date : 26 July 2023

B 0320211

Condition of this result of calibration

1. Reference Standard Instruments :
   This certification is traceable to the International System of Unit through the reference standards laboratory of Industrial Calibration Center,Technology Promotion Association (Thailand-Japan).

Instruments	Serial No.	ID No.	Certificate No.	Due Date
1) Burette	-	130BU10	23CG1172	22 Mar 2025
2) Balance	1126143764	140RC004	22MM50	20 Sep 2023

2. Standard Material :-

Material	Manufacturer	Lot.No.	Assay
Sodium Thiosulfate pentahydrate	Merck	AM1763316	100.2%

Result : **Dissolved Oxygen Meter Adjustment With Air 100 %**

Dissolved Oxygen Probe No.: 15E100464

Titration Method (Azide Modification Method) (mg/L)	DO Meter Reading (mg/L)	Standard Deviation (mg/L)
8.18	8.17	0.0055

This report was certified only for the instrument we tested.It is allowable to use for study the system efficiency,The environmental impact control and present to organization it may concerned Intend to use for advertising and referral purpose is prohibited.This report may not be reproduced other in full,without written approval of the laboratory

-o0o-

[redacted]

a 1172155

TECHNOLOGY PROMOTION ASSOCIATION (THAILAND-JAPAN)
CORPORATE SERVICES 3: EQUIPMENT CALIBRATION AND TESTING SERVICES
534/4 PATTANAKARN ROAD SOI 18, SUANLUANG, SUANLUANG BANGKOK 10250
TEL. 0-2717-3000-29 FAX. 0-2719-9484

ilac-MRA

NSC-TISI-TIS17025
CALIBRATION 0008

Cert. No.: 23LM125
Page.: 1 of 2

Certificate of Calibration

Equipment :	DO Meter with Sensor
Manufacturer :	YSI
Model :	5000-115V
Serial No. :	15E102796
ID No. :	RYG_EN0032
Submitted by :	ALS Laboratory Group (Thailand) Co.,Ltd. Rayong Branch 616/10 Moo 5 T. Maenam Khu, A. Pluakdaeng, Rayong 21140 Thailand
Location :	TPA On Site Calibration Laboratory
Received Order :	25 July 2023
Calibrated Date :	27 July 2023
Ambient Temperature :	(26 ± 10) °C
Relative Humidity :	(50 ± 30) %
AC Line Voltage :	(220 ± 22) V
Calibrated by :	Preecha Hlabih [redacted]
Approved by :	Approved Signatory

( ) Pornthippa Tameyakul
( ) Malee Butkruea
(✓) Suwit Imjai

Issue Date : 31 July 2023

The Uncertainties are for a confidence probability of approximately 95%

This certificate may not be reproduced other than in full, except with the prior written
Approval of the head of Corporate Services 3 : Equipment Calibration and Testing Services.

A 0053616

Equipment : DO Meter with Sensor **Cert. No.:** 23LM125

Condition As-Received : Used Item **Page.:** 2 of 2

Reference : 2307-0713DSC-2

Procedure Used :-

Calibration were conducted using in-house calibration procedure CP-OT01 according to comparison with Industrial Platinum Resistance Thermometer (IPRT) into Temperature Bath.

The temperature scale used was based on ITS-90.

Condition of this result of calibration

1. Reference standard instrument:-

Instrument	Serial No.	Cert. No.	Traceable	Due Date
1) Digital Thermometer	2188080	22I1285	TPA	21 Oct 2023

2. This certificate is valid only to the item calibrated on date and place of calibration.
3. This certification is traceable to the International System of Unit.

Remark : TPA : Technology Promotion Association (Thailand - Japan)

Result of Calibration :- (*) Without Adjustment

Function : Temperature measurement.

This instrument was connected with temperature sensor, S/N.: 1228475367

Calibration Point (°C)	Immersion Depth (mm)	Standard Temperature (°C)	UUC* Reading (°C)	Error (°C)	Uncertainty (± °C)	Coverage Factor *k*
20.00	100	20.011	19.91	-0.101	0.15	2.00

UUC* : Unit Under Calibration

The reported uncertainty of measurement was based on a standard uncertainty multiplied by a coverage factor ***k***, providing a level of confidence of approximately 95 %.

-o0o-

[redacted]

a 1159515

TECHNOLOGY PROMOTION ASSOCIATION (THAILAND-JAPAN)
CORPORATE SERVICES 3: EQUIPMENT CALIBRATION AND TESTING SERVICES
534/4 PATTANAKARN ROAD SOI 18, SUANLUANG, SUANLUANG BANGKOK 10250
TEL. 0-2717-3000-29 FAX. 0-2719-9484

NSC-TISI-TIS17025
CALIBRATION 0008

Cert. No.: 23TM962

Certificate of Calibration

Equipment :	Low Temp. Incubator
Manufacturer :	Memmert
Model :	IPP750
Serial No. :	V818.0084
ID No. :	RYG_EN0154
Submitted by :	ALS Laboratory Group (Thailand) Co.,Ltd. (Rayong Branch) 616/10 Moo 5 T. Maenam Khu, A. Pluakdaeng, Rayong 21140 Thailand
Location :	BOD Room
Received Order :	29 May 2023
Calibration Date :	29 May 2023
Ambient Temperature :	(26 ± 10) °C
Relative Humidity :	(50 ± 30) %
Calibrated by :	Man Pattanapongpaiboon
Approved by :	Approved Signatory

REVIEW BY [redacted]
APPROVED
NEXT CAL.

( ) Pornthippa Tameyakul
( ) Malee Butkruea
(✓) Suwit Imjai

Issue Date : 7 June 2023

The Uncertainties are for a confidence probability of approximately 95%

This certificate may not be reproduced other than in full, except with the prior written
Approval of the head of Corporate Services 3 : Equipment Calibration and Testing Services.

A 0054967

Equipment : Low Temp. Incubator

Condition As-Received : Used Item

Reference : 2305-0898OC-2

Cert. No.: 23TM962

Procedure Used :-

Calibration were conducted using calibration procedure CP-OT02 according to direct measurement method with Data Acquisition which connected with Resistance Temperature Detector (RTD).

The temperature scale used was based on ITS-90.

Condition of this result of calibration

1. Reference standard instrument:-

Instrument	Model	Serial No.	Cert. No.	Due Date
1) Data Acquisition	34972A	MY57013711	22LM93	02 Jul 2023

2. This certificate is valid only to the item calibrated on date and place of calibration.
3. This certification is traceable to the International System of Unit.

Result of Calibration :- (*) Without Adjustment

Function of UUC* : Temperature Source

Fresh air setting : Close

Environment during calibration		
	Beginning	Finished
Temp. (°C)	23	23
REL.Humid. (%)	54	56
AC Supply (Volt)	223	222

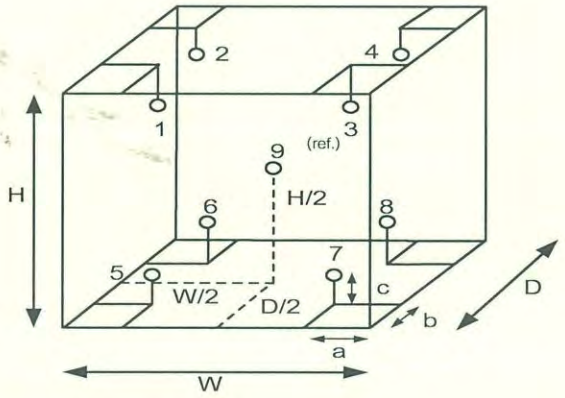

Position :	Ref. Std. ID No.:
1	18-18RTD-01
2	18-18RTD-02
3	18-18RTD-03
4	18-18RTD-04
5	18-18RTD-05
6	18-18RTD-10
7	18-18RTD-07
8	22-18RTD-08
9 (ref.)	18-18RTD-09

Probe Installation Details :

a =	10	cm
b =	10	cm
c =	10	cm

Dimension of Chamber :

D =	0.60	m
W =	1.0	m
H =	1.2	m
Capacity =	0.75	m^3

[redacted]

a 1165130

Equipment : Low Temp. Incubator

Condition As-Received : Used Item

Reference : 2305-0898OC-2

Result of Calibration :- (*) Without Adjustment

Function of UUC* : Temperature Source

Fresh air setting : Close

Cert. No.: 23TM962

Calibration Point (°C)	UUC* Setting (°C)	UUC* Reading (°C)	Temperature stability (± °C)	Temperature uniformity (°C)	Overall Variation (°C)	Coverage Factor *k*
20.0	20.0	20.0	0.019	0.72	1.0	2

Calibration Point (°C)	Measured Temperature (°C) Position									Uncertainty (±°C)
	1	2	3	4	5	6	7	8	9 (ref.)	
20.0	19.547	19.780	19.487	19.529	19.408	20.139	20.112	20.406	20.116	0.30

Average* : The average of 30 values in each position.

Temperature stability : One-half of the greatest maximum difference of measured temperature at any one sensor.

Temperature uniformity : The maximum difference of measured temperatures at any sensors and the measured temperature at the reference location which are observed at the same time or at as close an observation time as possible to determine the temperature pattern or homogeneity within the chamber under steady-state conditions.

Overall Variation : The Difference of the maximum and minimum measured temperatures throughout observation.

UUC* : Unit Under Calibration

Note : The reported uncertainty of measurement was included stability and excluded uniformity .

The reported uncertainty of measurement was based on a standard uncertainty multiplied by a coverage factor ***k***, providing a level of confidence of approximately 95 %.

-o0o-

[redacted]

a 1165129

Agilent Technologies

Agilent Technologies (Thailand) Limited
U CHU LIANG BLDG. 22/F UNIT A,D
968 RAMA 4 ROAD, SILOM, BANGRAK
Bangkok 10500 Thailand

Tel. +662 637 6363
Fax: +662 632 4334
Email: ccc-smt@agilent.com
Website: www.agilent.com/chem

SERVICE REPORT

Customer Purchase Order Number:	**Customer Number:** 70371013
Service Request:	**Service Request Date:**
Service Order: 6006068207	**Service Confirmation:** 6904837529

Customer Contact:
ALS Laboratory Group (Thailand) Co Ltd
Head Office
104 Phatthanakan 40 Phatthanakan Rd
Khwaeng Phatthanakan Khet Suan

TAX ID : 0105540004859

bounced-imchom.chanattagarn@alsglobal.com
227158760519

Invoice To:
ALS Laboratory Group (Thailand) Co Ltd
Head Office
104 Phatthanakan 40 Phatthanakan Rd
Khwaeng Phatthanakan Khet Suan

REVIEW BY ....
APPROVED BY
NEXT CAL. DAT [redacted]

Delivery Site:
ALS Laboratory Group (Thailand) Co Ltd
Head Office
104 Phatthanakan 40 Phatthanakan Rd
Khwaeng Phatthanakan Khet Suan

Location:
Room
Bldg
Lab
Dept

Direct Inquiries to:

Contact Name:	Customer Contact Center
Contact E-mail:	ccc-smt@agilent.com
Contact Telephone:	+662 637 6363
Contact Fax:	+662 632 4334

products | applications | software | services

Learn more about Agilent's Special Offers, Products, Services and our full range of laboratory productivity solutions optimized for your applications and workflows. Visit us at www.agilent.com/chem

Agilent Technologies (Thailand) Limited. Head Office
U Chu Liang Bldg. 22/F Unit A,D
968 Rama 4 Road, Silom, Bangrak,
Bangkok 10500 Thailand
Tax ID : 0105542068218

Citibank N.A. Bangkok Branch
399 Interchange 21 Building, Sukhumvit Road, Klongtoey Nau
Sub-district, Wattana District, Bangkok 10110 Thailand
Acc. No: 012-4452-007 ,
THB:Krung Thai Bank PCL
Siam Square Br.,416/1-2 Rama I Rd.,Pathumwan, BKK 10330
Thailand

ORIGINAL

Service Confirmation Number: 6904837529

Service Confirmation Date: 06.04.2023

Service Instrument:

Model Number	Model Description	Serial Number	System Handle	Parent Asset
SYS-IM-7900	ICPMS 7900 System			
G8410A	SPS 4 Autosampler	AU15430722	ICP MS 7900	SYS-IM-7900
G8411A	ISIS 3 for Agilent 7850/7900/8900	JP15510227	ICP MS 7900	SYS-IM-7900
G3292A	PSC 6106T Chiller	2U15A1948	ICP MS 7900	SYS-IM-7900
G8403A	Agilent 7900 ICP-MS	JP15471169	ICP MS 7900	SYS-IM-7900

Service Items:

Item	Service/Part #	Description	Qty	Entitlement	Service Start	Service End
1000	EOQ	Enterprise Operational Qualification	1.00	Agreement Entitlement - 100 % covered	06.04.2023	06.04.2023
1010	5185-5850	ICP-MS Checkout Solutions	1.00	Agreement Entitlement - 100 % covered		

Additional Information:

Service Confirmation Number: 6904837529

Service Confirmation Date: 06.04.2023

Service Information:

Problem Description: WU-S-OQ-ICP MS 7900-5001143313		
Service Provided: Test OQ control of instrument ICPMS = BKK_EL0043. After done all instrument test all Pass.		
Service Overview Code: Reason Code: Scheduled Service Diagnosis Code: Scheduled Service Resolution Code: Scheduled Service		
Reported Hours: 6.0	**Travel Hours:** 1.0	
Customer Field Service Representative Name: **Panthep Kurasathain**	**Customer Field Service Representative Signature:** [redacted]	**Date:** **06 Apr 2023**
Customer Name: **Anchalee Khamjan**	**Customer Signature:** [redacted]	**Date:** **06 Apr 2023**
Additional Comments:		

Metrological Center

SCI ECO Services Company Limited

33/2 Moo 3, T.Banpa, A.Kaengkhoi, Saraburi 18110

Telephone : +66 2 586 5792-4 Fax : +66 2 586 5109

Website : www.scieco.co.th E-Mail : calibrate@scg.co.th

Certificate of Calibration

Equipment	:	**HEATING BLOCK**
Manufacturer	:	**Environmental Express**
Model	:	**SC 196**
Serial No.	:	**6974CECW3285**
Customer Code	:	**BKK_EL0054**
ID No.	:	**T5306A3**
Customer	:	**ALS Laboratory Group (Thailand) Co.,Ltd.** **104 Phatthanakan 40, Phatthanakan Rd., Khwaeng Phatthanakan,** **Khet Suan Luang, Bangkok 10250**
Customer Location	:	**Acid Digestion Lab**
Date of Receipt	:	**13 September 2023**
Calibrated By		[redacted]**ikawan (Site Calibration Manager)**
Approved By		[redacted]_ **/ Sujjar Naknakred (Site Calibration Manager)**
Date of Issue	:	26 SEP 2023

REVIEW BY [redacted]

APPROVED [redacted]

NEXT CAL. D[redacted]

The uncertainties are for a confidence probability of approximately 95%.

This Certificate is issued in accordance with the conditions of accreditation granted by the Thai Laboratory Accreditation Scheme which has assessed the measurement capability of the laboratory and its traceability to recognized national standards and to the units of measurement realized at the corresponding national standard laboratory. This certificate may not be reproduced other than in full except with the prior written approval of the Metrological Center.

Metrological Center

SCI ECO Services Company Limited

33/2 Moo 3, T.Banpa, A.Kaengkhoi, Saraburi 18110

Telephone : +66 2 586 5792-4 Fax : +66 2 586 5109

Website : www.scieco.co.th E-Mail : calibrate@scg.co.th

Calibration Report

Equipment : **HEATING BLOCK**
Date of Calibration : **22 September 2023**
Environment : **Temperature : 21.8-23.1 °C**
Line Voltage : 221.6-226.3 V
Relative Humidity : 55 - 65 %RH

Condition of this results of calibration :

1. This equipment was calibrated by insert 20 standard thermocouples type T into its chamber , the other one standard thermocouples type T use for ambient temperature measurement . The calibration was done in according to WI-T20.
   All data show below were final values and the initial data from customer request . The temperature scale used was based on ITS - 90 .
2. Reference Standard Instrument :

Instrument	Model	Instrument No.	Certificate No.	Due Date
TC	TYPE T	TN21-TN30	T230014	17 January 2024
TC	TYPE T	TN31-TN40	T230014	17 January 2024
DATA LOGGER	34970A	T151	T230014	17 January 2024

3. This certificate is traceable to :
   National Institute of Metrology (Thailand) through Metrological Center (NSC-TISI-TIS 17025 CALIBRATION 0244.)
4. Condition of calibrated item : good
   Equipment Description :
   Time Constant 2 Hour 20 Minute At 95 °C
   Fresh Air Damper ☐ Open ☐ Min ☐ Medium ☐ Max
   ☐ Close
   ☒ Not Available
5. Adjustment :
   ( ) without adjustment (X) after adjustment

Approved By. [redacted]

Metrological Center

SCI ECO Services Company Limited

33/2 Moo 3, T.Banpa, A.Kaengkhoi, Saraburi 18110

Telephone : +66 2 586 5792-4 Fax : +66 2 586 5109

Website : www.scieco.co.th E-Mail : calibrate@scg.co.th

Calibration Report

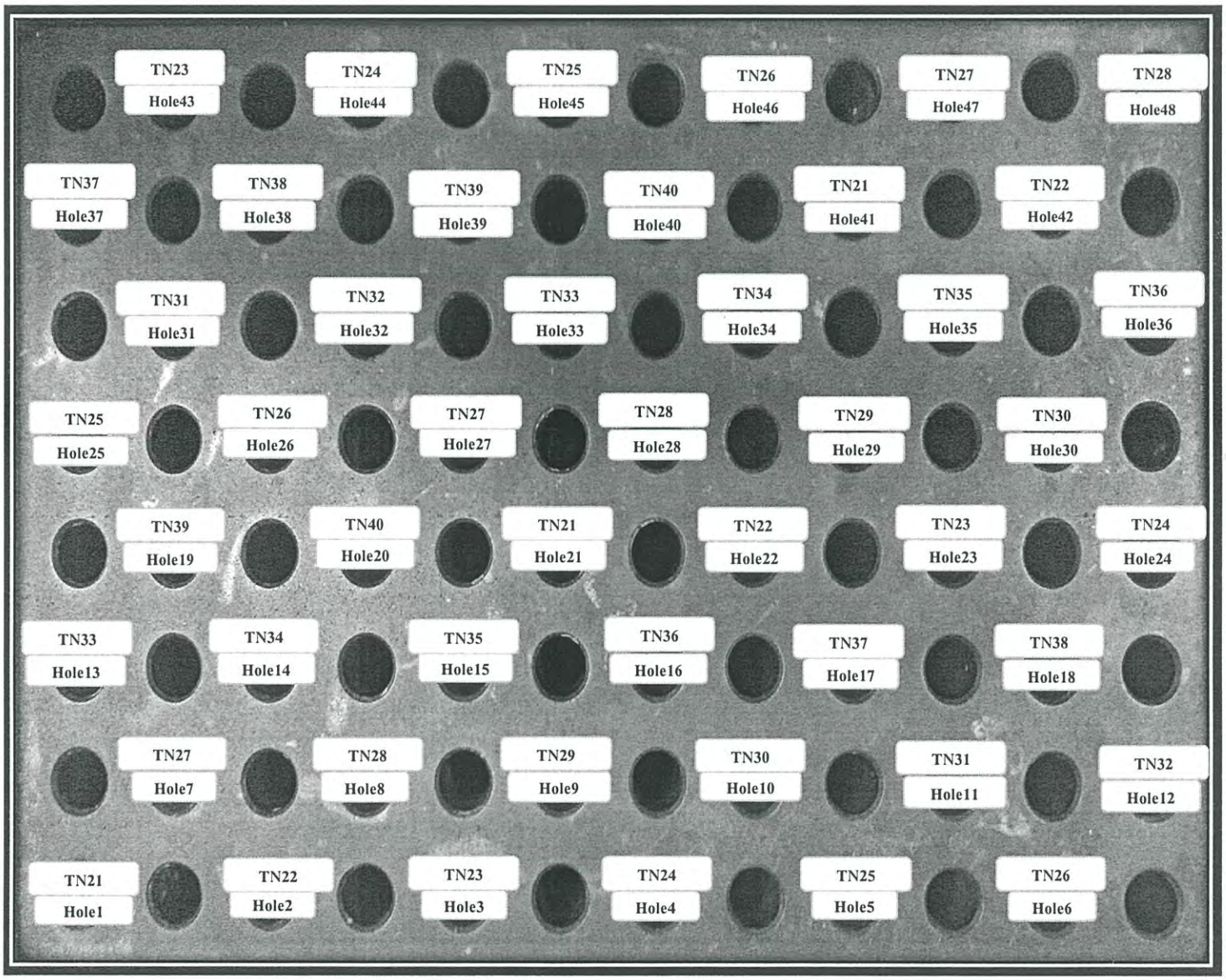

FRONT CONTROL

Approved By. [redacted]

Metrological Center

SCI ECO Services Company Limited

33/2 Moo 3, T.Banpa, A.Kaengkhoi, Saraburi 18110

Telephone : +66 2 586 5792-4 Fax : +66 2 586 5109

Website : www.scieco.co.th E-Mail : calibrate@scg.co.th

Calibration Report

Measurement Results

Calibration Point		Average Standard Reading at each position (°C)					
R1 Hole1-Hole6		**TN21**	**TN22**	**TN23**	**TN24**	**TN25**	**TN26**
CAL POINT	Max	95.01	94.41	95.20	95.41	94.51	95.17
95	Min	94.57	93.95	94.75	94.92	94.00	94.72
	Average	94.79	94.18	94.98	95.17	94.26	94.95
R2 Hole7-Hole12		**TN27**	**TN28**	**TN29**	**TN30**	**TN31**	**TN32**
	Max	95.36	95.43	95.19	95.16	95.35	94.97
	Min	94.94	94.95	94.72	94.71	94.90	94.57
	Average	95.15	95.19	94.96	94.94	95.13	94.77
R3 Hole13-Hole18		**TN33**	**TN34**	**TN35**	**TN36**	**TN37**	**TN38**
	Max	95.37	95.50	95.22	95.21	95.33	95.31
	Min	94.99	95.09	94.78	94.82	94.88	94.96
	Average	95.18	95.30	95.00	95.02	95.11	95.13
R4 Hole19-Hole24		**TN39**	**TN40**	**TN21**	**TN22**	**TN23**	**TN24**
	Max	95.59	94.42	94.52	94.24	94.63	94.67
	Min	95.21	94.06	94.13	93.88	94.28	94.27
	Average	95.40	94.24	94.33	94.06	94.45	94.47
R5 Hole25-Hole30		**TN25**	**TN26**	**TN27**	**TN28**	**TN29**	**TN30**
	Max	95.19	95.38	92.93	95.30	95.14	95.03
	Min	94.83	95.03	92.56	94.95	94.79	94.70
	Average	95.01	95.20	92.75	95.12	94.96	94.87
R6 Hole31-Hole36		**TN31**	**TN32**	**TN33**	**TN34**	**TN35**	**TN36**
	Max	94.63	94.90	94.77	94.31	94.24	93.87
	Min	94.24	94.55	94.44	93.98	93.92	93.56
	Average	94.43	94.72	94.60	94.14	94.08	93.71
R7 Hole37-Hole42		**TN37**	**TN38**	**TN39**	**TN40**	**TN21**	**TN22**
	Max	94.30	94.44	94.04	93.81	94.89	95.35
	Min	93.95	94.05	93.67	93.48	94.39	94.90
	Average	94.13	94.24	93.86	93.65	94.64	95.12
R8 Hole43-Hole48		**TN23**	**TN24**	**TN25**	**TN26**	**TN27**	**TN28**
	Max	95.99	95.63	95.28	95.29	95.45	94.87
	Min	95.57	95.15	94.82	94.84	94.99	94.48
	Average	95.78	95.39	95.05	95.07	95.22	94.68

Approved By. [redacted]

Metrological Center

SCI ECO Services Company Limited

33/2 Moo 3, T.Banpa, A.Kaengkhoi, Saraburi 18110

Telephone : +66 2 586 5792-4 Fax : +66 2 586 5109

Website : www.scieco.co.th E-Mail : calibrate@scg.co.th

Calibration Report

Measurement Results

Calibration Point		Average Standard Reading at each position (°C)					
R1 Hole1-Hole6		**TN21**	**TN22**	**TN23**	**TN24**	**TN25**	**TN26**
CAL POINT	Max	105.23	104.32	105.43	105.25	104.44	105.27
105	Min	104.94	103.95	105.15	105.04	104.11	104.96
	Average	105.09	104.13	105.29	105.15	104.28	105.12
R2 Hole7-Hole12		**TN27**	**TN28**	**TN29**	**TN30**	**TN31**	**TN32**
	Max	105.30	105.12	105.18	105.22	105.12	105.16
	Min	105.11	104.92	104.96	105.00	104.92	104.97
	Average	105.20	105.02	105.07	105.11	105.02	105.06
R3 Hole13-Hole18		**TN33**	**TN34**	**TN35**	**TN36**	**TN37**	**TN38**
	Max	105.37	105.63	105.02	104.80	104.69	105.19
	Min	105.17	105.37	104.75	104.59	104.50	105.00
	Average	105.27	105.50	104.88	104.69	104.60	105.09
R4 Hole19-Hole24		**TN39**	**TN40**	**TN21**	**TN22**	**TN23**	**TN24**
	Max	105.31	104.43	106.41	104.71	105.63	105.82
	Min	105.08	104.22	106.15	104.41	105.37	105.56
	Average	105.19	104.33	106.28	104.56	105.50	105.69
R5 Hole25-Hole30		**TN25**	**TN26**	**TN27**	**TN28**	**TN29**	**TN30**
	Max	104.95	106.26	103.34	105.78	105.59	105.87
	Min	104.67	105.96	103.08	105.56	105.36	105.68
	Average	104.81	106.11	103.21	105.67	105.48	105.77
R6 Hole31-Hole36		**TN31**	**TN32**	**TN33**	**TN34**	**TN35**	**TN36**
	Max	104.75	104.86	104.80	105.20	104.50	104.39
	Min	104.54	104.63	104.59	105.00	104.32	104.18
	Average	104.65	104.75	104.69	105.10	104.41	104.28
R7 Hole37-Hole42		**TN37**	**TN38**	**TN39**	**TN40**	**TN21**	**TN22**
	Max	104.30	104.90	104.85	104.65	104.88	104.85
	Min	104.09	104.72	104.66	104.49	104.63	104.52
	Average	104.19	104.81	104.75	104.57	104.76	104.68
R8 Hole43-Hole48		**TN23**	**TN24**	**TN25**	**TN26**	**TN27**	**TN28**
	Max	105.71	105.85	105.39	105.61	105.42	105.19
	Min	105.45	105.61	105.14	105.27	105.18	104.94
	Average	105.58	105.73	105.27	105.44	105.30	105.07

Approved By. [redacted]

Metrological Center

SCI ECO Services Company Limited

33/2 Moo 3, T.Banpa, A.Kaengkhoi, Saraburi 18110

Telephone : +66 2 586 5792-4 Fax : +66 2 586 5109

Website : www.scieco.co.th E-Mail : calibrate@scg.co.th

Certificate No. T231676

Calibration Report

Measurement Results:

HEATING BLOCK			Temperature Distribution	
Setting (°C)	Reading (°C)		Stability (±°C)	Uncertainty (±°C)
	Min , Max	Average		
100.0	100.3 , 100.5	100.4	0.26	0.81
107.0	107.0 , 107.1	107.1	0.19	0.78

* The quoted uncertainty exclude " uniformity "

The calibration result apply only the above calibrated item.

The result of test was found accurate as shown on date and place of test only.

The reported expanded uncertainty is based on a standard uncertainty multiplied by a coverage factor *k* which for a t-distribution, providing a level of confidence of approximately 95 % .

Approved By._____

Metrological Center

SCI ECO Services Company Limited

33/2 Moo 3, T.Banpa, A.Kaengkhoi, Saraburi 18110, Thailand.

Saraburi Tel : +66 3627 3096 Fax : +66 3627 3100

Bangkok Tel : +668 9205 6851 , +669 8247 2360

Website : www.scieco.co.th E-Mail : calibrate@scg.co.th

NSC-TISI-TIS 17025
CALIBRATION 0244

Certificate of Calibration

Equipment	:	**Chamber (Cold Room)**
Manufacturer	:	**KOLDTECH**
Model	:	**KM 320**
Serial No.	:	**TBN-1012061/05**
Customer Code	:	**BKK_EN0167**
ID No.	:	**T2463A3**
Customer	:	**ALS Laboratory Group (Thailand) Co.,Ltd.** **104 Phatthanakan 40, Phatthanakan Rd., Khwaeng Phatthanakan,** **Khet Suan Luang, Bangkok 10250**
Customer Location	:	**Environmental Laboratory**
Date of Receipt	:	**27 June 2022**
Calibrated By		[redacted]**akred (Site Calibration Manager)**
Approved By		[redacted] **/ Boonchai Suriyawong (Site Calibration Manager)**
Date of Issue	:	04 JUL 2022

REVIEW BY [redacted]

APPROVED B[redacted]

NEXT CAL. DATE 30/12/23

The uncertainties are for a confidence probability of approximately 95%.

This Certificate is issued in accordance with the conditions of accreditation granted by the Thai Laboratory Accreditation Scheme which has assessed the measurement capability of the laboratory and its traceability to recognized national standards and to the units of measurement realized at the corresponding national standard laboratory. This certificate may not be reproduced other than in full except with the prior written approval of the Metrological Center.

Certificate No. T221644

Calibration Report

Equipment : **Chamber (Cold Room)**
Date of Calibration : **30 June - 1 July 2022**
Environment : **Temperature : 18.9-23.7 °C**
Line Voltage : 222.9-226.5 V
Relative Humidity : 55 - 65 %RH

Condition of this results of calibration :

1. This equipment was calibrated by insert nine standard thermocouples type T into its chamber , the other one standard thermocouples type T use for ambient temperature measurement . The calibration was done in according to WI-T20 (based on ASTM E145-94 (Reapproved 2001) and AS2853-1986).
   All data show below were final values and the initial data from customer request . The temperature scale used was based on ITS - 90 .
2. Reference Standard Instrument :

Instrument	Model	Instrument No.	Certificate No.	Due Date
TC	TYPE T	TN161-TN170	T210009	30 July 2022
TC	TYPE T	TN171-TN180	T210009	30 July 2022
DATA LOGGER	34970A	T149	T210009	30 July 2022

3. This certificate is traceable to :
   National Institute of Metrology (Thailand) through Metrological Center (NSC-TISI-TIS 17025 CALIBRATION 0244.)
4. Condition of calibrated item : good
   Equipment Description :
   Time Constant 3 Hour - Minute At 3 °C
   Fresh Air Damper ☐ Open ☐ Min ☐ Medium ☐ Max
   ☐ Close
   ☒ Not Available
5. Adjustment :
   ( ) without adjustment (X) after adjustment

Approved By [redacted]

Certificate No. T221644

Calibration Report

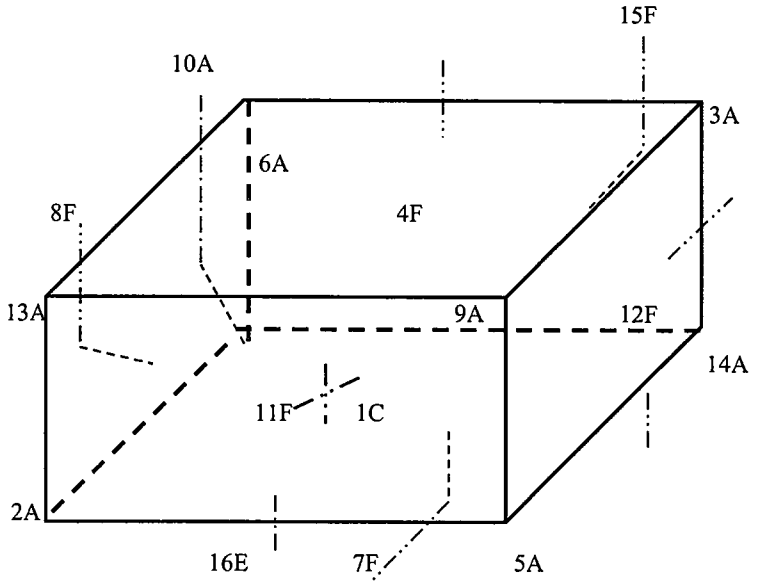

C = Centre , F = Centre of Face , A = Corner , E = Centre of Edge

1C	=	TN161
2A	=	TN162
3A	=	TN163
4F	=	TN164
5A	=	TN165
6A	=	TN166
7F	=	TN167
8F	=	TN168
9A	=	TN169
10A	=	TN170

11F	=	TN171
12F	=	TN172
13A	=	TN173
14A	=	TN174
15F	=	TN175
16E	=	TN176

Approved By. [redacted]

SCG

Metrological Center

SCI ECO Services Company Limited

33/2 Moo 3, T.Banpa, A.Kaengkhoi, Saraburi 18110, Thailand.

NSC-TISI-TIS 17025
CALIBRATION 0244

Certificate No. T221644

Calibration Report

Measurement Results:

	Average Standard Reading at each position (°C)									
Calibration Point	**TN161**	**TN162**	**TN163**	**TN164**	**TN165**	**TN166**	**TN167**	**TN168**	**TN169**	**TN170**
3	2.71	2.82	2.75	2.89	2.95	3.68	3.02	2.96	3.03	2.85
	TN171	**TN172**	**TN173**	**TN174**	**TN175**	**TN176**				
	2.97	3.02	2.89	3.04	2.97	3.33				

Chamber (Cold Room)			Temperature Distribution				
Setting (°C)	**Reading (°C)**		**Average (°C)**	**Stability (±°C)**	**Uniformity (°C)**	**Uncertainty (±°C)**	**Coverage Factor *k***
	Min , Max	**Average**					
3.0	2.9 , 4.0	3.2	2.99	1.05	1.30	1.66	2.00

* The quoted uncertainty exclude " uniformity "

The calibration result apply only the above calibrated item.

The result of test was found accurate as shown on date and place of test only.

The reported expanded uncertainty is based on a standard uncertainty multiplied by a coverage factor *k* which for a t-distribution, providing a level of confidence of approximately 95 % .

Approved By. [redacted]

TECHNOLOGY PROMOTION ASSOCIATION (THAILAND-JAPAN)
CORPORATE SERVICES 3: EQUIPMENT CALIBRATION AND TESTING SERVICES
534/4 PATTANAKARN ROAD SOI 18, SUANLUANG, SUANLUANG BANGKOK 10250
TEL. 0-2717-3000-29 FAX. 0-2719-9484

NSC-TISI-TIS17025
CALIBRATION 0008

Cert. No.: 23TM1103
Page : 1 of 3

Certificate of Calibration

Equipment :	Autoclave
Manufacturer :	Sanyo
Model :	MLS-3781
Serial No. :	830167
ID No. :	BKK_ML0037
Submitted by :	ALS Laboratory Group (Thailand) Co.,Ltd. 104 Phatthanakan 40, Phatthanakan Rd., Khwaeng Phatthanakan, Khet Suan Luang, Bangkok 10250 Thailand
Location :	Media Preparation Room
Received Order :	17 July 2023
Calibration Date :	17 July 2023
Ambient Temperature :	(26 ± 10) °C
Relative Humidity :	(50 ± 30) %
Calibrated by :	Preecha Hlahib
Approved by :	[redacted] Approved Signatory

REVIEW BY ...
APPROVED BY
NEXT CAL. DA

[redacted]

( ) Pornthippa Tameyakul
( ) Malee Butkruea
(✓) Suwit Imjai

Issue Date : 24 July 2023

The Uncertainties are for a confidence probability of approximately 95%

This certificate may not be reproduced other than in full, except with the prior written
Approval of the head of Corporate Services 3 : Equipment Calibration and Testing Services.

A 0053615

Equipment : Autoclave **Cert. No.:** 23TM1103
Condition As-Received : Used Item **Page :** 2 of 3
Reference : 2307-0285OC-3

Procedure Used :-

Calibration were conducted using in-house calibration procedure CP-OT03 according to direct measurement method with Data Acquisition which connected with Thermocouple Type T

The temperature scale used was based on ITS-90.

Condition of this result of calibration

1. Reference standard instrument:-

Instrument	Serial No.	Cert. No.	Traceable	Due Date
1) Data Acquisition	MY57013823	23LM66	TPA	25 Mar 2024

2. This certificate is valid only to the item calibrated on date and place of calibration.
3. This certification is traceable to the International System of Unit.
4. This result of calibration covers laboratory autoclaves for the sterilization of goods and material which could be infected with organisms categorized as Hazard Group 1, 2 and 3**

(** = Categorization of pathogens according to hazard and categories of containment, second edition, 1990)

It does not cover autoclaves for use with material infect with organisms in Hazard Group 4, for which complete containment and sterilization of infected condensate is considered to be essential.

This result of calibration does not apply to sterilizers or disinfectors used for medical, dental, pharmaceutical or veterinary purposes which are directry concerned with patient care, or those used for fabrics subjected to sterilization which are required to be dry at the end of cycle.

Remark : TPA : Technology Promotion Association (Thailand - Japan)

Result of Calibration :- (*) Without Adjustment

Function of UUC* : Temperature Source

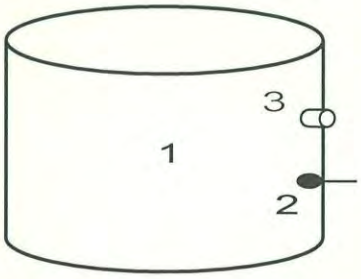

	Environmental		
	(°C)	(%R.H.)	(Volt)
Beginning of Calibration	22	53	220
Finished of Calibration	22	54	220

Position	Description	Ref. Std. ID No.:
1 =	Center of chamber	22-17TC-01
2 =	Temperature sensor	23-17TC-02
3 =	Exhaust port	19-17TC-03

[redacted]

a 1159503

Equipment : Autoclave

Condition As-Received : Used Item

Reference : 2307-0285OC-3

Result of Calibration :- (*) Without Adjustment

Function of UUC* : Temperature Source

Cert. No.: 23TM1103

Operating parameter Set : Temperature = 121 °C

Sterilization period = 15 minute

UUC* Setting (°C)	UUC* Reading (°C)	Position	Average* Standard Reading (°C)	Stability (± °C)	Pressure Reading (MPa)	Uncertainty (± °C)	Coverage Factor *k*
121	121	1	120.877	0.39	0.12	1.0	2
		2	120.870				
		3	120.866				

Average* : The average of 30 values in each position.

Stability : One-half of the greatest maximum difference of measured temperature at any one probe.

UUC* : Unit Under Calibration

Note : The reported uncertainty of measurement was included stability and excluded uniformity .

The reported uncertainty of measurement was based on a standard uncertainty multiplied by a coverage factor ***k***, providing a level of confidence of approximately 95 %.

-o0o-

[redacted]

TECHNOLOGY PROMOTION ASSOCIATION (THAILAND-JAPAN)
CORPORATE SERVICES 3: EQUIPMENT CALIBRATION AND TESTING SERVICES
534/4 PATTANAKARN ROAD SOI 18, SUANLUANG, SUANLUANG BANGKOK 10250
TEL. 0-2717-3000-29 FAX. 0-2719-9484

NSC-TISI-TIS17025
CALIBRATION 0008

Cert. No.: 23TM1146
Page : 1 of 3

Certificate of Calibration

Equipment :	Incubator
Manufacturer :	SHEL-LAB
Model :	1915A
Serial No. :	0200599
ID No. :	BKK_ML0010
Submitted by :	ALS Laboratory Group (Thailand) Co.,Ltd. 104 Phatthanakan 40, Phatthakan Rd., Khwawng Phatthanakan, Khet Suan Luang, Bangkok 10250 Thailand
Location :	Incubation & Micrological Reading
Received Order :	17 July 2023
Calibration Date :	17 July 2023
Ambient Temperature :	(26 ± 10) °C
Relative Humidity :	(50 ± 30) %
Calibrated by :	Man Pattanapongpaiboon
Approved by :	[redacted] Approved Signatory

( ) Pornthippa Tameyakul
(✓) Malee Butkruea
( ) Suwit Imjai

REVIEW BY [redacted]
APPROVED B[redacted]
NEXT CAL. DA[redacted]

Issue Date : 24 July 2023

The Uncertainties are for a confidence probability of approximately 95%

This certificate may not be reproduced other than in full, except with the prior written
Approval of the head of Corporate Services 3 : Equipment Calibration and Testing Services.

A 0056489

Equipment : Incubator

Condition As-Received : Used Item

Reference : 2307-0285OC-1

Cert. No.: 23TM1146

Procedure Used :-

Calibration were conducted using calibration procedure CP-OT02 according to direct measurement method with Data Acquisition which connected with Resistance Temperature Detector (RTD).

The temperature scale used was based on ITS-90.

Condition of this result of calibration

1. Reference standard instrument:-

Instrument	Serial No.	Cert. No.	Traceable	Due Date
1) Data Acquisition	MY49001451	23LM27	TPA	25 Feb 2024

2. This certificate is valid only to the item calibrated on date and place of calibration.
3. This certification is traceable to the International System of Unit.

Remark : TPA : Technology Promotion Association (Thailand - Japan)

Result of Calibration :- (*) Without Adjustment

Function of UUC* : Temperature Source

Fresh air setting : Close

Environment during calibration		
	Beginning	Finished
Temp. (°C)	24	24
REL.Humid. (%)	54	56
AC Supply (Volt)	221	223

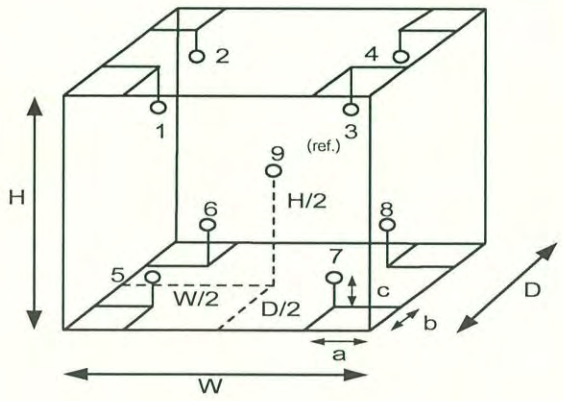

Position :	Ref. Std. ID No.:
1	19RTD-2/1
2	19RTD-2/2
3	19RTD-2/3
4	19RTD-2/4
5	19RTD-2/5
6	19RTD-2/6
7	19RTD-2/7
8	19RTD-2/8
9 (ref.)	19RTD-2/9

Probe Installation Details :

a =	10	cm
b =	10	cm
c =	10	cm

Dimension of Chamber :

D =	0.50	m
W =	0.75	m
H =	1.2	m
Capacity =	0.45	m^3

[redacted]

Equipment : Incubator

Condition As-Received : Used Item

Reference : 2307-0285OC-1

Result of Calibration :- (*) Without Adjustment

Function of UUC* : Temperature Source

Fresh air setting : Close

Cert. No.: 23TM1146

Calibration Point (°C)	UUC* Setting (°C)	UUC* Reading (°C)	Temperature stability (± °C)	Temperature uniformity (°C)	Overall Variation (°C)	Coverage Factor *k*
35.0	35.0	35.0	0.055	0.30	0.44	2

Calibration Point (°C)	Measured Temperature (°C) Position									Uncertainty (±°C)
	1	2	3	4	5	6	7	8	9 (ref.)	
35.0	34.888	34.933	34.815	34.813	35.064	35.019	35.156	35.141	35.087	0.30

Average* : The average of 30 values in each position.

Temperature stability : One-half of the greatest maximum difference of measured temperature at any one sensor.

Temperature uniformity : The maximum difference of measured temperatures at any sensors and the measured temperature at the reference location which are observed at the same time or at as close an observation time as possible to determine the temperature pattern or homogeneity within the chamber under steady-state conditions.

Overall Variation : The Difference of the maximum and minimum measured temperatures throughout observation.

UUC* : Unit Under Calibration

Note : The reported uncertainty of measurement was included stability and excluded uniformity .

The reported uncertainty of measurement was based on a standard uncertainty multiplied by a coverage factor ***k***, providing a level of confidence of approximately 95 %.

-o0o-

[redacted]

TECHNOLOGY PROMOTION ASSOCIATION (THAILAND-JAPAN)
CORPORATE SERVICES 3: EQUIPMENT CALIBRATION AND TESTING SERVICES
534/4 PATTANAKARN ROAD SOI 18, SUANLUANG, SUANLUANG BANGKOK 10250
TEL. 0-2717-3000-27 FAX. 0-2719-9484

ilac-MRA

NSC-TISI-TIS17025
CALIBRATION 0008

Cert. No.: 22TM1571

Certificate of Calibration

Equipment :	Hot Air Oven
Manufacturer :	Binder
Model :	ED 240/E2
Serial No. :	00-15533
ID No. :	BKK_ML0013
Submitted by :	ALS Laboratory Group (Thailand) Co.,Ltd. 104 Phatthanakan 40, Phatthanakan Rd., Khwaeng Phatthanakan, Khet Suan Luang, Bangkok 10250 Thailand
Location :	Media Preparatiom Room
Received Order :	21 November 2022
Calibration Date :	21 November 2022
Ambient Temperature :	(26 ± 10) °C
Relative Humidity :	(50 ± 30) %

REVIEW BY .....[redacted]
APPROVED BY [redacted]
NEXT CAL. DATE [redacted]

Calibrated by : Krisda Malee [redacted]

Approved by : [redacted]
Approved Signatory

( ) Pornthippa Tameyakul
(✓) Malee Butkruea
( ) Suwit Imjai

Issue Date : 29 November 2022

The Uncertainties are for a confidence probability of approximately 95%

This certificate may not be reproduced other than in full, except with the prior written
Approval of the head of Corporate Services 3 : Equipment Calibration and Testing Services.

A 0048150

Equipment : Hot Air Oven

Condition As-Received : Used Item

Reference : 2211-0623OC-1

Cert. No.: 22TM1571

Procedure Used :-

Calibration were conducted using calibration procedure CP-OT02 according to direct measurement method with Data Acquisition which connected with Thermocouple Type T.

The temperature scale used was based on ITS-90.

Condition of this result of calibration

1. Reference standard instrument:-

Instrument	Model	Serial No.	Cert. No.	Due Date
1) Data Acquisition	34970A	MY44067817	22LM121	22 Aug 2023

2. This certificate is valid only to the item calibrated on date and place of calibration.
3. This certification is traceable to the International System of Unit.

Result of Calibration :- (*) After Adjustment

Function of UUC* : Temperature Source

Fresh air setting : Not Available

Environment during calibration		
	Beginning	Finished
Temp. (°C)	26	26
REL.Humid. (%)	53	55
AC Supply (Volt)	219	220

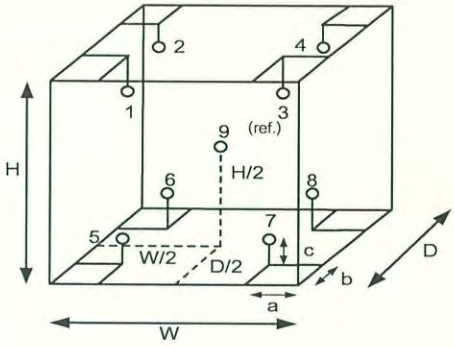

Position :	Ref. Std. ID No.:
1	21-15TC-01
2	21-15TC-02
3	21-15TC-03
4	21-15TC-04
5	21-15TC-05
6	21-15TC-06
7	21-15TC-07
8	21-15TC-08
9 (ref.)	21-15TC-09

Probe Installation Details :

a =	5.0	cm
b =	5.0	cm
c =	5.0	cm

Dimension of Chamber :

D =	0.50	m
W =	0.80	m
H =	0.60	m
Capacity =	0.24	m^3

[redacted]

Equipment : Hot Air Oven

Condition As-Received : Used Item

Reference : 2211-0623OC-1

Result of Calibration :- (*) After Adjustment

Function of UUC* : Temperature Source

Fresh air setting : Not Available

Cert. No.: 22TM1571

Calibration Point (°C)	UUC* Setting (°C)	UUC* Reading (°C)	Temperature stability (± °C)	Temperature uniformity (°C)	Overall Variation (°C)	Uncertainty (±°C)	Coverage Factor *k*
180	180	180	0.70	1.5	2.9	1.4	2

Calibration Point (°C)	Measured Temperature (°C)								
	Position								
	1	2	3	4	5	6	7	8	9 (ref.)
180	179.520	180.585	178.855	179.482	178.827	179.938	179.074	180.199	180.068

Average* : The average of 30 values in each position.

Temperature stability : One-half of the greatest maximum difference of measured temperature at any one sensor.

Temperature uniformity : The maximum difference of measured temperatures at any sensors and the measured temperature at the reference location which are observed at the same time or at as close an observation time as possible to determine the temperature pattern or homogeneity within the chamber under steady-state conditions.

Overall Variation : The Difference of the maximum and minimum measured temperatures throughout observation.

UUC* : Unit Under Calibration

Note : The reported uncertainty of measurement was included stability and excluded uniformity .

The reported uncertainty of measurement was based on a standard uncertainty multiplied by a coverage factor ***k***, providing a level of confidence of approximately 95 %.

-o0o-

[redacted]

a 1138053

TECHNOLOGY PROMOTION ASSOCIATION (THAILAND-JAPAN)
CORPORATE SERVICES 3: EQUIPMENT CALIBRATION AND TESTING SERVICES
534/4 PATTANAKARN ROAD SOI 18, SUANLUANG, SUANLUANG BANGKOK 10250
TEL. 0-2717-3000-29 FAX. 0-2719-9484

NSC-TISI-TIS17025
CALIBRATION 0008

Cert. No.: 23TM637
Page : 1 of 3

Certificate of Calibration

Equipment :	Water Bath
Manufacturer :	Memmert
Model :	WNE 45
Serial No. :	L712.0429
ID No. :	BKK_ML0056
Submitted by :	ALS Laboratory Group (Thailand) Co.,Ltd. 104 Phatthanakan 40, Phatthanakan Rd., Khwaeng Phatthanakan, Khet Suan Luang, Bangkok 10250 Thailand
Location :	Incubator & Microbiological Reading
Received Order :	20 April 2023
Calibration Date :	20 April 2023
Ambient Temperature :	(26 ± 10) °C
Relative Humidity :	(50 ± 30) %
Calibrated by :	Kunchit Promprat
Approved by :	[redacted] Approved Signatory

REVIEW BY ....[redacted]
APPROVED BY
NEXT CAL. DATE .....

( ) Pornthippa Tameyakul
(✓) Malee Butkruea
( ) Suwit Imjai

Issue Date : 24 April 2023

The Uncertainties are for a confidence probability of approximately 95%

This certificate may not be reproduced other than in full, except with the prior written
Approval of the head of Corporate Services 3 : Equipment Calibration and Testing Services.

A 0053357

Equipment : Water Bath

Condition As-Received : Used Item

Reference : 2304-0253OC-1

Cert. No.: 23TM637

Procedure Used :-

Calibration were conducted using in-house calibration procedure CP-OT04 according to direct measurement method with Data Acquisition which connected with Industrial Platinum Resistance Thermometer (IPRT).

The temperature scale used was based on ITS-90.

Condition of this result of calibration

1. Reference standard instrument:-

Instrument	Model	Serial No.	Cert. No.	Due Date
1) Data Acquisition	34970A	MY44073381	22LM78/1	12 May 2023

2. This certificate is valid only to the item calibrated on date and place of calibration.
3. This certification is traceable to the International System of Unit.

Result of Calibration :- (*) Without Adjustment

Function of UUC* : Temperature Source

Heat transfer medium used : Water

	Environmental		AC Voltage Supply
	(°C)	(%R.H.)	(Volt)
Beginning of Calibration	25	45	223
Finished of Calibration	25	43	223

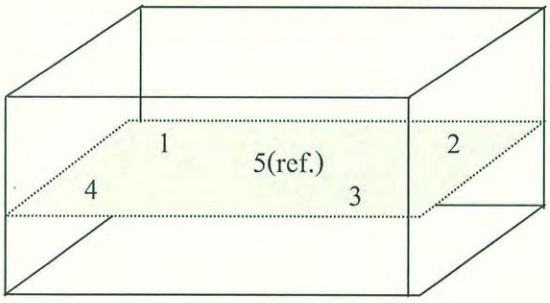

Front

Position :	Ref. Std. S/N.:
1	4803988-006
2	4803988-007
3	4804539-014
4	4804539-015
5(ref.)	4804539-016

[redacted]

a 1158265

Equipment : Water Bath

Condition As-Received : Used Item

Reference : 2304-0253OC-1

Result of Calibration :- (*) Without Adjustment

Function of UUC* : Temperature Source

Cert. No.: 23TM637

Calibration point (°C)	UUC* Setting (°C)	UUC* Reading (°C)	Average* Standard Reading (°C) Position					Uncertainty (± °C)
			1	2	3	4	5 (ref.)	
44.5	44.5	44.5	44.492	44.463	44.475	44.510	44.491	0.15
45.0	45.0	45.0	45.005	44.962	44.979	45.016	44.986	0.15

Calibration point (°C)	Uniformity (°C)	Stability (± °C)	Coverage Factor *k*
44.5	0.051	0.022	2
45.0	0.080	0.026	2

Average* : The average of 30 values in each position.

Uniformity : The maximum difference of measured temperatures at any sensors and the measured temperature at the reference location which are observed at the same time or at as close an observation time as possible to determine the temperature pattern or homogeneity within the chamber under steady-state conditions.

Stability : One-half of the greatest maximum difference of measured temperature at any one probe.

UUC* : Unit Under Calibration

Note : The reported uncertainty of measurement was included stability and excluded uniformity.

The reported uncertainty of measurement was based on a standard uncertainty multiplied by a coverage factor ***k***, providing a level of confidence of approximately 95 %.

-o0o-

[redacted]

a 1158264

Bara Scientific Co., Ltd.
968 U Chu Liang Building Floor7 Rama4 Road
Silom Bangrak Bangkok Thailand 10500
Tel : 02-6324300 Fax : 02-6375496-7
www.barascientific.com

Bara Scientific
Solution of Success

ilac-MRA

NSC-TISI-TIS 17025
CALIBRATION 0209

Certificate of Calibration

Certificate No.	BSCC-UV-367/23
Equipment	UV/Vis Spectrophotometer
Model	UV-1800
Manufacturer	Shimadzu
Serial No.	A11454908533CD
ID No.	BKK_EN0018
Date of receipt	15 September 2023
Date of calibration	15 September 2023
Date of issue	22 September 2023

REVIEW BY ..
APPROVED BY
NEXT CAL. DAT

[redacted]

Customer name	ALS Laboratory Group (Thailand) Co., Ltd.
Address	104 Soi Phattanakan 40, Phattanakan Road, Phattanakan, Suan Luang, Bangkok 10250
Temperature	(23.4 - 24.7) °C (On site)
Humidity	(55.5 - 61.2) %RH (On site)
Equipment condition	Good Operation
Calibration Location	Organic Prep
Calibration Procedure	In-house method WI-UV-702-01 based on ASTM E275-01
Traceability	Wavelength Accuracy is traceable to certificate No. 95917 and 95918 Photometric Accuracy is traceable to certificate No. 95937 and 95924 Stray Light is traceable to certificate No. 95908 The above certificate are traceble to SI unit through Starna Scientific Ltd. (UKAS accredited calibration laboratory NO. 0659)
Calibrated by	Mr.Wanchana Janloey

Approved by

[redacted]

Mr.Kanchit Choothep
Technical Manager

The above results are valid exclusively for the calibrated item(s) as mention in this report / certificate.
Advertising the report / Certificate and publicity of the results are prohibited and also shall not be reproduced except in full, without written approval of the Bara Scientific Co., Ltd.

Bara Scientific
Solution of Success

Bara Scientific Co., Ltd.
968 U Chu Liang Building Floor7 Rama4 Road
Silom Bangrak Bangkok Thailand 10500
Tel : 02-6324300 Fax : 02-6375496-7
www.barascientific.com

ilac-MRA

NSC-TISI-TIS 17025
CALIBRATION 0209

Certificate of Calibration

Certificate No. **BSCC-UV-367/23**

Calibration Results:

1.Wavelength Accuracy

Certified Wavelength (nm)	UUC (nm)	Error (nm)	Uncertainty (±nm)
241.70	241.67	-0.03	0.18
334.02	334.03	0.01	0.18
418.53	418.59	0.06	0.18
572.99	573.14	0.15	0.18
879.41	879.21	-0.20	0.18

2.Photometric Accuracy (UV)

Wavelength (nm)	Certified Absorbance (A)	UUC (A)	Error (A)	Uncertainty (±A)
235	0.0000	0.0000	0.0000	0.0075
	0.7467	0.7460	-0.0007	0.0075
257	0.0000	0.0000	0.0000	0.0075
	0.8662	0.8646	-0.0016	0.0075
313	0.0000	0.0000	0.0000	0.0075
	0.2904	0.2908	0.0004	0.0075
350	0.0000	0.0001	0.0001	0.0075
	0.6429	0.6415	-0.0014	0.0075

*CNR = Customer not request

The above results are valid exclusively for the calibrated item(s) as mention in this report / certificate.
Advertising the report / Certificate and publicity of the resuits are prohibited and also shall not be reproduced except in full, without written approval of the Bara Scientific Co., Ltd.

Bara Scientific
Solution of Success

Bara Scientific Co., Ltd.
968 U Chu Liang Building Floor7 Rama4 Road
Silom Bangrak Bangkok Thailand 10500
Tel : 02-6324300 Fax : 02-6375496-7
www.barascientific.com

ilac-MRA

NSC-TISI-TIS 17025
CALIBRATION 0209

Certificate of Calibration

Certificate No. **BSCC-UV-367/23** Number of Page(s) 3 of 3

Calibration Results:

3.Photometric Accuracy (Visible)

Wavelength (nm)	Certified Absorbance (A)	UUC (A)	Error (A)	Uncertainty (±A)
420.0	0.0000	0.0000	0.0000	0.0042
	0.5783	0.5793	0.0010	0.0042
	0.7628	0.7624	-0.0004	0.0042
	1.0206	1.0216	0.0010	0.0042
440.0	0.0000	0.0000	0.0000	0.0042
	0.5621	0.5625	0.0004	0.0042
	0.7455	0.7452	-0.0003	0.0042
	0.9985	0.9989	0.0004	0.0042
465.0	0.0000	0.0000	0.0000	0.0042
	0.5227	0.5229	0.0002	0.0042
	0.6880	0.6873	-0.0007	0.0042
	0.9487	0.9486	-0.0001	0.0042
546.1	0.0000	0.0000	0.0000	0.0042
	0.5207	0.5211	0.0004	0.0042
	0.6973	0.6960	-0.0013	0.0042
	0.9959	0.9944	-0.0015	0.0042
590.0	0.0000	0.0000	0.0000	0.0042
	0.5544	0.5538	-0.0006	0.0042
	0.7253	0.7236	-0.0017	0.0042
	1.0942	1.0925	-0.0017	0.0042
635.0	0.0000	0.0000	0.0000	0.0042
	0.5616	0.5612	-0.0004	0.0042
	0.6927	0.6909	-0.0018	0.0042
	1.0881	1.0866	-0.0015	0.0042

*CNR = Customer not request

4.Stray Light*

Standard cut-off wavelenght (nm)	Unit Under Calibration(UUC)		
	Wavelength (nm)	Transmission (%T)	Absorbance (A)
200.96±0.11nm	200.55	0.9770	2.0104

The Stray light transmission reference is less than 1.0%T and Stray light absorbance reference is greater than 2.00A
***Stray Light not NSC-ONSC Accredited.**

The measurement uncertainty is base on a standard uncertainty multiplied by a coverage factor k=2 providing a level of confidence of approximately 95%.

*****End of Certificate*****

The above results are valid exclusively for the calibrated item(s) as mention in this report / certificate.
Advertising the report / Certificate and publicity of the resuits are prohibited and also shall not be reproduced except in full, without written approval of the Bara Scientific Co., Ltd.

TECHNOLOGY PROMOTION ASSOCIATION (THAILAND-JAPAN)
CORPORATE SERVICES 3: EQUIPMENT CALIBRATION AND TESTING SERVICES
534/4 PATTANAKARN ROAD SOI 18, SUANLUANG, SUANLUANG BANGKOK 10250
TEL. 0-2717-3000-27 FAX. 0-2719-9484

ilac-MRA

NSC-TISI-TIS17025
CALIBRATION 0008

Cert. No.: 22TM1570

Certificate of Calibration

Equipment :	CO2 Incubator
Manufacturer :	ShelLab
Model :	TC 2123 2E
Serial No. :	0701199
ID No. :	BKK_ML0012
Submitted by :	ALS Laboratory Group (Thailand) Co.,Ltd. 104 Phatthanakan 40, Phatthanakan Rd., Khwaeng Phatthanakan, Khet Suan Luang, Bangkok 10250 Thailand
Location :	Presumptive Testing Lab
Received Order :	21 November 2022
Calibration Date :	21 November 2022
Ambient Temperature :	(26 ± 10) °C
Relative Humidity :	(50 ± 30) %

REVIEW BY ..[redacted]
APPROVED B[redacted]
NEXT CAL. DA[redacted]

Calibrated by : Krisda Malee

Approved by : [redacted]

Approved Signatory

( ) Pornthippa Tameyakul
(✓) Malee Butkruea
( ) Suwit Imjai

Issue Date : 29 November 2022

The Uncertainties are for a confidence probability of approximately 95%

This certificate may not be reproduced other than in full, except with the prior written
Approval of the head of Corporate Services 3 : Equipment Calibration and Testing Services.

Equipment : CO2 Incubator

Condition As-Received : Used Item

Reference : 2211-0623OC-5

Cert. No.: 22TM1570

Procedure Used :-

Calibration were conducted using calibration procedure CP-OT02 according to direct measurement method with Data Acquisition which connected with Resistance Temperature Detector (RTD).

The temperature scale used was based on ITS-90.

Condition of this result of calibration

1. Reference standard instrument:-

Instrument	Model	Serial No.	Cert. No.	Due Date
1) Data Acquisition	34970A	MY44067817	22LM121	22 Aug 2023

2. This certificate is valid only to the item calibrated on date and place of calibration.
3. This certification is traceable to the International System of Unit.

Result of Calibration :- (*) After Adjustment

Function of UUC* : Temperature Source

Fresh air setting : Not Available

Environment during calibration		
	Beginning	Finished
Temp. (°C)	25	26
REL.Humid. (%)	52	50
AC Supply (Volt)	221	220

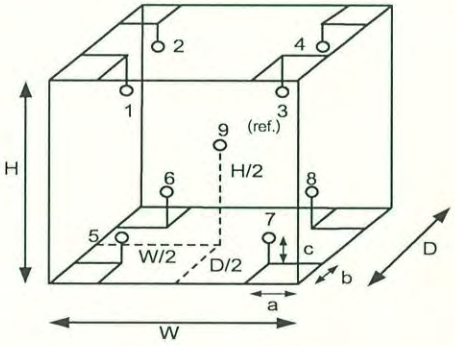

Position :	Ref. Std. ID No.:
1	19-15RTD-01
2	19-15RTD-02
3	19-15RTD-03
4	19-15RTD-04
5	19-15RTD-05
6	21-15RTD-06
7	19-15RTD-07
8	19-15RTD-08
9 (ref.)	19-15RTD-09

Probe Installation Details :

a = 5.0 cm

b = 5.0 cm

c = 5.0 cm

Dimension of Chamber :

D = 0.40 m

W = 0.40 m

H = 0.35 m

Capacity = 0.056 m^3

[redacted]

a 1138059

Equipment : CO2 Incubator

Condition As-Received : Used Item

Reference : 2211-0623OC-5

Result of Calibration :- (*) After Adjustment

Function of UUC* : Temperature Source

Fresh air setting : Not Available

Cert. No.: 22TM1570

Calibration Point (°C)	UUC* Setting (°C)	UUC* Reading (°C)	Temperature stability (± °C)	Temperature uniformity (°C)	Overall Variation (°C)	Uncertainty (±°C)	Coverage Factor *k*
44.0	44.0	44.0	0.076	0.25	0.30	0.30	2

Calibration Point (°C)	Measured Temperature (°C)								
	Position								
	1	2	3	4	5	6	7	8	9 (ref.)
44.0	43.968	44.086	44.090	44.063	43.951	43.897	44.011	43.983	44.133

Average* : The average of 30 values in each position.

Temperature stability : One-half of the greatest maximum difference of measured temperature at any one sensor.

Temperature uniformity : The maximum difference of measured temperatures at any sensors and the measured temperature at the reference location which are observed at the same time or at as close an observation time as possible to determine the temperature pattern or homogeneity within the chamber under steady-state conditions.

Overall Variation : The Difference of the maximum and minimum measured temperatures throughout observation.

UUC* : Unit Under Calibration

Note : The reported uncertainty of measurement was included stability and excluded uniformity .

The reported uncertainty of measurement was based on a standard uncertainty multiplied by a coverage factor ***k***, providing a level of confidence of approximately 95 %.

-o0o-

[redacted]

a 1137239

BKK_EL0023

analytikjena
An Endress+Hauser Company

REVIEW BY [redacted]
APPROVED [redacted]
NEXT CAL. D[redacted]

Maintenance Protocol

Atomic Fluorescence Spectrometer

mercur DUO / mercur DUO plus

Serial-No.: K170A0143 Customer-No.:

Date: 24 May 2023 Carried out by: Srichai Fak-on

Maintenance with following Operational Qualification (OQ) ☐
(requires a separate OQ protocol)

Company	บริษัท เอแอลเอส แลบอราทอรี กรุ๊ป (ประเทศไทย) จำกัด
User	
Department	ห้องแลบปฏิบัติการ
Street	104 ซอย 40 ถนนพัฒนาการ แขวงสวนหลวง เขตสวนหลวง
Zip Code, City	กรุงเทพมหานคร 10250
Country	ประเทศไทย
Phone	
Fax	
E-mail	

Maintenance works basic unit

tightness visual check inside the Mercur	☑
visual check if gold-traps are broken	☑
visual check if spectrometer is contaminated	☑
visual check of the fluorescence cell	☑
visual check of the absorption cell, incl. window	☑
reactor cleaning	☑
check pump-hose, if necessary change it	☑
check swivel drive (SEV)	☑
check drying-hose, output gas-liquid-separator	☑
test Bubble-Sensor	☑
check gas flows	☑
check volume flows, reagents	☑
recording stray light values	☑
measurement with 30 ng/l	☑

Maintenance works Autosampler

Serial No.: 701 739

lubricate the dosing-winding (Teflon-grease-spray)	☑
clean the dosing cylinder, if necessary exchange it	☑
lubricate the winding system of the height drive with some drops of oil	☑
check the toothed belt	☑
check the position of the mechanical stopper (height: 13mm)	☑
check the pump rate of mixing pump (<14s AS52, typ.7s/<20s AS52S, typ.10s)	☑
check the pump rate of washing cup	☑
check the electrical hose connections for good contact	☑
check the connectors of the magnetic valves	☑
check the dosing hose for buckling, if necessary exchange it	☑

Device parameter	nominal value	actual value
visual check general tightness inside the Mercur	o.k.: ☑	changed: ☐
visual check Goldtraps	o.k.: ☑	changed: ☐
visual check spectrometer		
Fluorescence cell	o.k.: ☑	changed: ☐
Absorption cell, incl. window	o.k.: ☑	changed: ☐
lens	o.k.: ☑	changed: ☐
Swivel drive (SEV)	o.k.: ☑	changed: ☐
check pump hoses	o.k.: ☑	changed: ☐
check hoses and hose connectors	o.k.: ☑	changed: ☐
check and clean reactor	o.k.: ☑	changed: ☐
check drying hose output Gas-liquid-seperator	o.k.: ☑	changed: ☐
check bubble-sensor	o.k.: ☑	not o.k.: ☐
Check gasflow		
Argon pressure valve 4	1.2 – 1.5 bar	1.5 bar
Valve 1	10 Nl/h or 0.166 NL/min	0.163 NL/min
Valve 2	50 Nl/h or 0.833 NL/min	0.403 NL/min
Valve 3	5 Nl/h or 0.083 NL/min	0.140 NL/min
Valve 4	10 Nl/h or 0.166 NL/min	0.108 NL/min
Check liquidflow		
Acid	2.5ml/min ± 1 ml	2.5 ml/min
Red.-agent	2.5ml/min ± 1 ml	2.5 ml/min
Sample	10ml/min ± 2 ml	10 ml/min
Adventitious light - values	**(V)**	**from file**
	100	0
	200	0
	300	0
	350	0
	400	0
	450	2
	500	5
	550	10
	575	15	14
	600	20	20

Device parameter	nominal value	actual value
Analytical parameters Fluorescence cell		
Conditions.: max.conc.: 10µg/L PMT-voltage: ...360.....V		
Blank-solution		Int ...0.00024...
without enrichment / FBR 30 ng/L	Int > 0.0015 RSD < 3 %	Int_1..0.00172... RSD.0.45.....%
Conditions.: max.conc.: 1.7µg/L PMT-voltage: ...352.....V		
Blank-solution		Int...0.00370...
with enrichment / FBR 30 ng/L	Int > 0.008 RSD < 3 %	Int_2..0.01060... RSD.2.38.....%
Fok.- factor (Int_2 / Int_1)	> 3.5	6.16
Analytical parameters Absorption cell		
Blank-solution		Ext.0.00093...
without enrichment / FBR 100 ng/L	Ext. > 0.0012 RSD < 5 %	Ext.0.00449... RSD.2.58.....%
Comments		

[redacted]

Signature Technician

24 May 2023

Place, Date (DD/MM/YYYY)

Signature Customer

24 May 2023

Place, Date (DD/MM/YYYY)

analytikjena
An Endress+Hauser Company

35 Moo 5. 345 Road, Khlong Khoi, Pak Kret,
Nonthaburi. 11120 Thailand.
Phone: +66(2) 1062970-72
Fax: +66(2) 1062973
www.analytik-jena.com

Service Report

Customer's address :	Customer's Ref. No.
บริษัท เอเชียเอร แอนด์ทอร์ ซีซี (ประเทศไทย) จำกัด	
104 ซอย 40 ถนนพัฒนาการ แขวงสวนหลวง เขตสวนหลวง	
กรุงเทพมหานคร 10250.	
E-mail :	Phone : / Fax :

☑ Analytik Jena Instruments (Thailand) Ltd.
☐ Analytik Jena Far East (Thailand) Ltd.

Job No. 2305282PM.	User :	Service Engineer : [illegible]	Date : 24/5/2023	Page : 1/1
Instrument model : Mercur	Serial No. K170A0143		Software Version No. 4.7.10.0	

☐ Repair (RE) ☑ Maintenance (PM) ☐ Installation (IN) ☐ Warranty ☐ Application (AP) ☐ Site Prep.(SP) ☐ Visit(VI)

Fault / Claim : - ทำเรื่องเปลี่ยนอะไหล่ตามใบสั่งซื้อเลขที่ Po. No. 23001112 / (INV2305-037) ☐☐☐ Error Code
- ทำงานตาม PM Contract Year 2023 (1 Time / Year 2023)

Action taken :
- Maintenance work Basic Unit
- Check Device parameter.
- Check gas flow.
- Check liquid flow.
- Check Adventitious light - Valves

Test run Analytical parameter Fluorescence cell
Test run Analytical parameter Absorption cell

การเปลี่ยนไส้กรองใหม่ทุกตัว

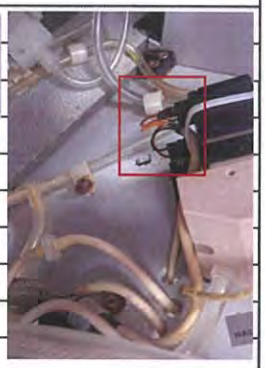

Action Pending / Recommendation : เตรียมทำเรื่องซื้อใช้งาน.

การเปลี่ยนตระกูล Valve Bubber sensor.

☐ Spare Part ☐ Instrument Configuration :

Item No.	Name	Quantity	Unit Price
1.			
2.			
3.			
4.			
5.			
6.			
7.			
8.			

Herewith the undersigned confirm the time devoted, the work performed, the perfect function of the device, and the receipt/delivery of the specified spare parts.
*Traveled hours and kilometers can only be entered after the return of the service engineer.

[redacted]

Work completed?
☑ Yes
☐ No

Services are subject to the General Terms and Condition[redacted]

Mercur

Report file:	C:\WinAAS\TMP\2023\May\Pro_032			
Program version:	4.7.10.0	Printed on:	5/24/2023	12:46
		Recording started on	5/24/2023	12:35 GMT+7.0
Operator:	PSU,OTA			
Laboratory:	ALS-BKK			
Code:	II_Hg095_2023			

Remarks:

Food,water

Method parameters — Hg

Method	Without enrichment / FBR 30ng/L_PM24052023		
Created on	5/24/2023 Time 12:27		
Program	---		

Parameters Mercur Technique: Hg fluorescence

Line	253.7 nm		
Lamp type	Hg-LP		
Integr. mode	Peak height	Integr. time	30 s
PMT	360 V		
AZ time	5 s	Peak smoothing	8/5
Delay	0 s		

Working mode	w/o enrich.	System cleaning	Acid
FBR technique	on	Wash time acid	10 s
Pump speed	3	Soaking time	20 s
Sample load time	10 s	Gas load time	5 NL/h
Reaction time	10 s		
Waiting time AZ	5 s		
Delay	0 s		
Purge time1	28 s		
Purge time2	15 s	Gas wash time2	10 NL/h

Autosampler

Autosampler	AS51S/F	Tray type	87/139
Working mode	continuous		
Dilution	---		

QC parameters

QC type	Conc. check		
QC check samp. 1	---	QC check samp. 2	---
Conc.	---	Conc.	---
Error limit	---	Error limit	---
Rep. measurement	off	Reaction	flag + continue
QC std.1 no.	1(30.000 ng/L)	QC std.2 no.	1(30.000 ng/L)
QC std.1 limit	± 50.00%	QC std.2 limit	± 50.00%
QC std. act.	flag + continue		
Expect. blank abs.	0.0100± 0.0100	Reaction	flag + continue
QC precision	off		
		Reaction	off
		QC Recal.factor	Off

Calibration settings

Calib. meth	Standard calib.	Calibr. unit	ng/L
No. standards	1	Conversion fac.	1000000
Type of standards	---	Standard prep.	Premixed
		Blank correct.	---
		Recalib. std. no.	---
Output unit	µg/L	Conversion fac.	1000
Calib. stat.	Mean	Meas. cycles	3
		Blind cycles	1
Stock sol. 1	---	Stock sol. 2	---
Stock sol. 3	---	Stock sol. 4	---
Type of cal. curve	linear	Intercept	calculated
Weighted cal.	off	Grubbs stat.	off
Check of cal. curve	no outlier test		

Sample statistics

Stat. mode	Mean	Meas. cycles	2
Confid. level	95.4 %	Blind cycles	1
Grubbs stat.	---		

Calibration standards

Hg

No	Name	State	Pos	Conc./ ng/L	Ints	SD	RSD/%
1	Cal-Zero	(--)	79	0.000	H: **0.000249**	**0.000132**	**53.13**
					A: 0.004274	0.001698	39.72
2	Cal-Std1	(--)	80	30.000	H: **0.001720**	**0.000007**	**0.459**
					A: 0.02172	0.000023	0.107

Calibration function 1 **5/24/2023 12:44 Calibration (Peak height)**

Ints=k1+k2*conc

k1=0.000249 k2=0.000049 Recal. factor: ---

Slope	0.00005 Ints/(ng/L)	R2-adjusted	1.0000
sc0	1.00000 ng/L		
Lower limit	0 ng/L	Upper limit	33.0 ng/L
Detection limit	---	Deter. limit	---

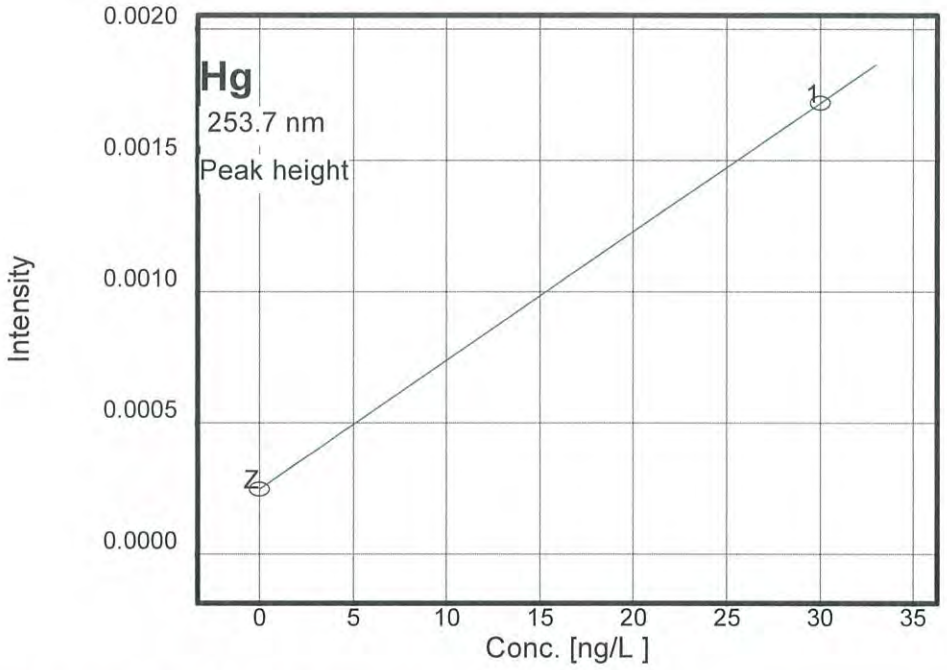

Measurements and events (sorted by time)

Hg	Without enrichment / FBR 30ng/L_PM 24052023					5/24/2023	12:35
ID	**Conc.**	**Ints**	**BG**	**SD**	**RSD/%**	**Int. type**	**Time**
Cal-Zero		0.000143				PkH	12:37
		0.000397					12:38
		0.000207					12:40
	0ng/L	0.000249		0.0001324	53.13		12:40
Cal-Std1		0.001720				PkH	12:42
		0.001712					12:43
		0.001728					12:44
	30.00ng/L	0.001720		0.000007897	0.459		12:44
Calibration	Calibration function: 01						12:44

Peak plots

Hg

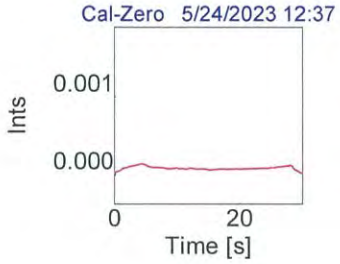

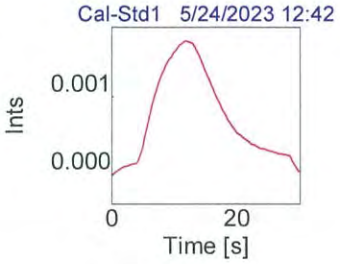

Mercur

Report file:	C:\WinAAS\TMP\2023\May\Pro_033			
Program version:	4.7.10.0	Printed on:	5/24/2023	14:01
		Recording started on	5/24/2023	13:37 GMT+7.0
Operator:	PSU,OTA			
Laboratory:	ALS-BKK			
Code:	II_Hg095_2023			

Remarks:

Food,water

Method parameters Hg

Method	Enrichment / FER 30ng/L PM_24052023		
Created on	5/24/2023 Time 13:36		
Program	---		

Parameters Mercur Technique: Hg fluorescence

Line	253.7 nm		
Lamp type	Hg-LP		
Integr. mode	Peak height	Integr. time	40 s
PMT	352 V		
AZ time	5 s	Peak smoothing	12/11
Delay	0 s		

Working mode	Enr. w/o reload.	System cleaning	Off
FBR technique	off	Wash time acid	10 s
Pump speed	3	Soaking time	20 s
Sample load time	10 s	Gas load time	10 NL/h
Reaction time	10 s		
Waiting time AZ	10 s	Gas AZ wait	10 NL/h
Purge time1	30 s		
Purge time2	15 s	Gas wash time2	5 NL/h
Purge time3	20 s		
Heat.time coll.1	20 s	Cool. time coll.1	30 s

QC parameters

QC type	Conc. check		
QC check samp. 1	---	QC check samp. 2	---
Conc.	---	Conc.	---
Error limit	---	Error limit	---
Rep. measurement	off	Reaction	flag + continue
QC std.1 no.	1(30.000 ng/L)	QC std.2 no.	1(30.000 ng/L)
QC std.1 limit	± 50.00%	QC std.2 limit	± 50.00%
QC std. act.	flag + continue		
Expect. blank abs.	0.0100± 0.0100	Reaction	flag + continue
QC precision	off		
		Reaction	off
		QC Recal.factor	Off

Calibration settings

Calib. meth	Standard calib.	Calibr. unit	ng/L
No. standards	1	Conversion fac.	1000000
Type of standards	---	Standard prep.	Premixed
		Blank correct.	---
		Recalib. std. no.	---
Output unit	µg/L	Conversion fac.	1000
Calib. stat.	Mean	Meas. cycles	3
		Blind cycles	1
Stock sol. 1	---	Stock sol. 2	---
Stock sol. 3	---	Stock sol. 4	---
Type of cal. curve	linear	Intercept	calculated
Weighted cal.	off	Grubbs stat.	off
Check of cal. curve	no outlier test		

Sample statistics

Stat. mode	off	Meas. cycles	1
Confid. level	95.4 %	Blind cycles	1
Grubbs stat.	---		

Calibration standards

Hg

No	Name	State	Pos	Conc./ ng/L	Ints	SD	RSD/%
1	Cal-Zero	(--)	##	0.000	H: **0.003700**	**0.000081**	**2.192**
					A: 0.02531	0.000153	0.607
2	Cal-Std1	(--)	##	30.000	H: **0.01060**	**0.000253**	**2.386**
					A: 0.06689	0.002766	4.136

Calibration function 1 5/24/2023 14:00 Calibration (Peak height)

Ints=k1+k2*conc

k1=0.003700 k2=0.000230 Recal. factor: ---

Slope	0.00023 Ints/(ng/L)	R2-adjusted	1.0000
sc0	1.00000 ng/L		
Lower limit	0 ng/L	Upper limit	33.0 ng/L
Detection limit	---	Deter. limit	---

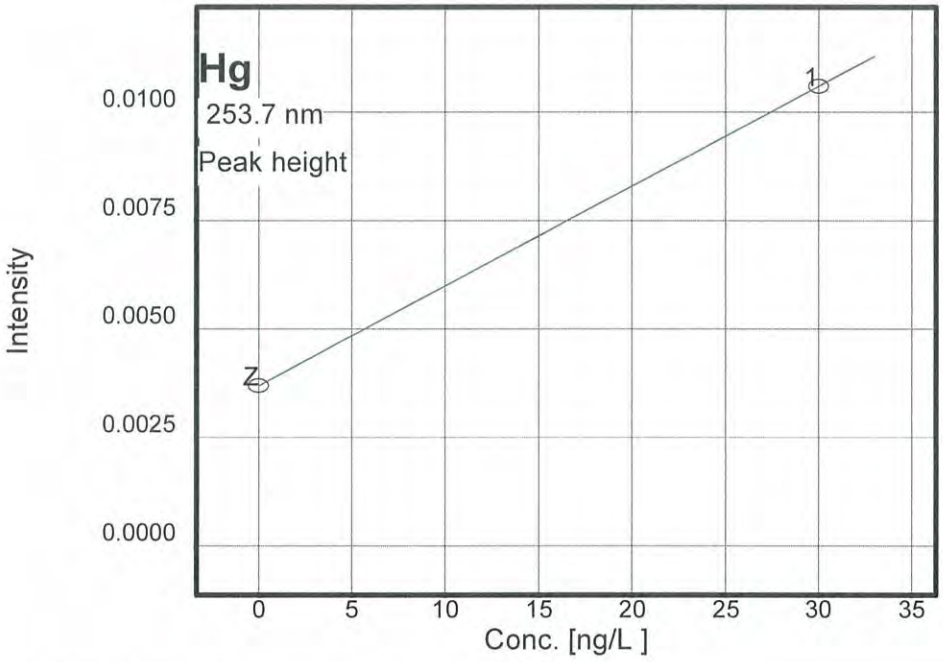

Measurements and events (sorted by time)

Hg	Enrichment / FER 30ng/L PM_24052023					5/24/2023	13:37
ID	**Conc.**	**Ints**	**BG**	**SD**	**RSD/%**	**Int. type**	**Time**
Cal-Zero		0.003792				PkH	13:41
		0.003666					13:43
		0.003640					13:44
	0ng/L	0.003700		0.000081090	2.192		13:44
Cal-Std1		0.009498				PkH	13:49
		0.008333					13:50
		0.008961					13:52
	30.00ng/L	0.008931		0.0005830	6.528		13:52
Cal-Std1		0.01031				PkH	13:57
		0.01074					13:58
		0.01076					14:00
	30.00ng/L	0.01060		0.0002530	2.386		14:00
Calibration	Calibration function: 01						14:00

Peak plots

Hg

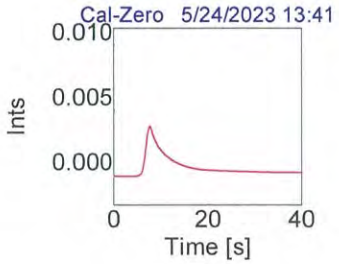

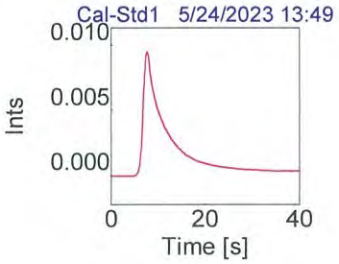

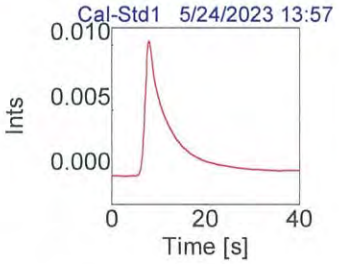

Mercur

Report file:	C:\WinAAS\TMP\2023\May\Pro_034			
Program version:	4.7.10.0	Printed on:	5/24/2023	14:33
		Recording started on	5/24/2023	14:19 GMT+7.0
Operator:	PSU,OTA			
Laboratory:	ALS-BKK			
Code:	II_Hg095_2023			

Remarks:

Food,water

Method parameters Hg

Method	Without enrichment / Abs / FBR 100ng/L_PM 24052023		
Created on	5/24/2023 Time 14:18		
Program	---		

Parameters Mercur Technique: Hg absorption

Line	253.7 nm		
Lamp type	Hg-LP		
Integr. mode	Peak height	Integr. time	55 s
PMT	225 V		
AZ time	5 s	Peak smoothing	2/5
Delay	8 s		

Working mode	w/o enrich.	System cleaning	Acid
FBR technique	on	Wash time acid	15 s
Pump speed	4	Soaking time	20 s
Sample load time	8 s	Gas load time	5 NL/h
Reaction time	12 s		
Waiting time AZ	15 s		
Delay	10 s		
Purge time1	50 s		
Purge time2	10 s	Gas wash time2	10 NL/h

QC parameters

QC type	Conc. check		
QC check samp. 1	---	QC check samp. 2	---
Conc.	---	Conc.	---
Error limit	---	Error limit	---
Rep. measurement	off	Reaction	flag + continue
QC std.1 no.	1(100.00 ng/L)	QC std.2 no.	1(100.00 ng/L)
QC std.1 limit	± 50.00%	QC std.2 limit	± 0.00%
QC std. act.	flag + continue		
Expect. blank abs.	0.0100± 0.0100	Reaction	flag + continue
QC precision	off		
		Reaction	off
		QC Recal.factor	Off

Calibration settings

Calib. meth	Standard calib.	Calibr. unit	ng/L
No. standards	1	Conversion fac.	1000000
Type of standards	---	Standard prep.	Premixed
		Blank correct.	---
		Recalib. std. no.	---
Output unit	µg/L	Conversion fac.	1000
Calib. stat.	Mean	Meas. cycles	3
		Blind cycles	1
Stock sol. 1	---	Stock sol. 2	---
Stock sol. 3	---	Stock sol. 4	---
Type of cal. curve	linear	Intercept	calculated
Weighted cal.	off	Grubbs stat.	off
Check of cal. curve	no outlier test		

Sample statistics

Stat. mode	Mean	Meas. cycles	2
Confid. level	95.4 %	Blind cycles	1
Grubbs stat.	---		

Calibration standards

Hg

No	Name	State	Pos	Conc./ ng/L	Abs	SD	RSD/%
1	Cal-Zero	(--)	##	0.00	H: **0.000932** A: 0.035926	**0.000138** 0.006208	**14.88** 17.28
2	Cal-Std1	(--)	##	100.00	H: **0.004494** A: 0.061286	**0.000116** 0.001275	**2.586** 2.082

Calibration function 1 5/24/2023 14:33 Calibration (Peak height)

Abs=k1+k2*conc

k1=0.000932 k2=0.000036 Recal. factor: ---

Slope	0.00004 Abs/(ng/L)	R2-adjusted	1.0000
sc0	1.00000 ng/L	Charact. conc.	122.411 (ng/L)/1%I
Lower limit	0 ng/L	Upper limit	110. ng/L
Detection limit	---	Deter. limit	---

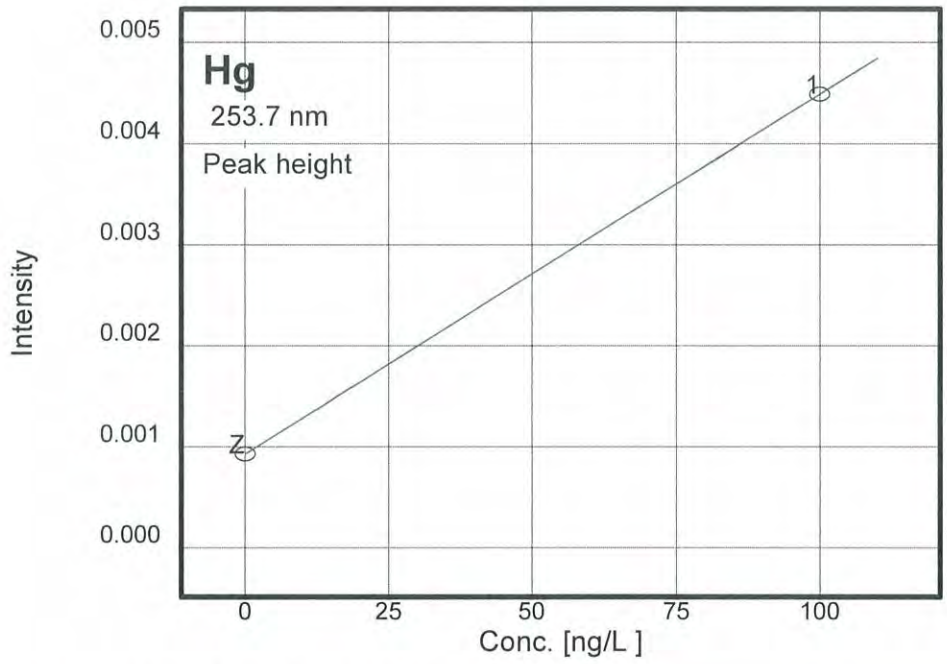

Measurements and events (sorted by time)

Hg	Without enrichment / Abs / FBR 100ng/L_PM 24052023					5/24/2023	14:19
ID	**Conc.**	**Abs**	**BG**	**SD**	**RSD/%**	**Int. type**	**Time**
Cal-Zero		0.001039				PkH	14:22
		0.000775					14:23
		0.000981					14:25
	0ng/L	0.000932		0.00013872	14.88		14:25
Cal-Std1		0.004528				PkH	14:29
		0.004364					14:31
		0.004589					14:33
	100.ng/L	0.004494		0.00011623	2.586		14:33
Calibration	Calibration function: 01						14:33

Peak plots
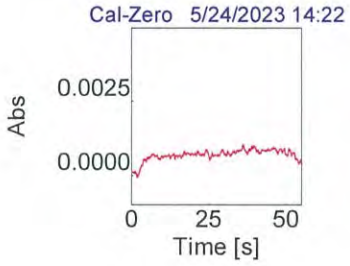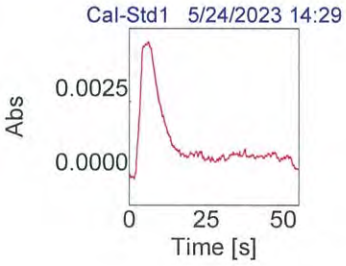
Hg